Two-circuit Limit Switch

WL-N/WL

Two-circuit limit switches that can be selected to match the operating environment and application

- Wide variety of head shapes, including Roller Lever, Plunger, Flexible Rod, and Fork Lock Lever Switches.
- You can select the optimum actuator shape for the workpiece shape and movement from a variety of actuators.
- In addition to general detection, we also have environment resistant models for harsh environments, sputter resistant models for welding processes, and long-life models for high-frequency use.

For the most recent information on models that have been certified for safety standards, refer to your OMRON website.

⚠ **Be sure to read *Safety Precautions* on page 62 to 67 and *Safety Precautions for All Limit Switches*.**

Features

General-purpose Switches

A Wide Range of Models

You can select the optimum product for the workpiece shape and movement from a variety of actuators, including Roller Lever, Plunger, Flexible Rod, and Fork Lock Lever Switches.

Environment-resistant Switches

Six environment resistant models are available

Airtight Switches, Hermetic Switches, Heat-resistant Switches, Low-temperature Switches, Corrosion-proof Switches, and Weather-proof Switches are available.
You can select the model based on the onsite environment.

Spatter-prevention Switches

Ideal for Welding Sites

Uses stainless steel and plastic materials that prevent the adhesion of spatter.
They can be used to reduce problems caused by zinc power generated during welding.

Long-life Switches

Long-life Models for High-frequency Applications

A mechanical durability of over 30 million cycles is achieved by improving slidability and the wear resistance of the head.

Features Common

DPDB Operation

The two-circuit double-break structure ensures circuit braking.

- Basic/Retention type Switches (WL-N)

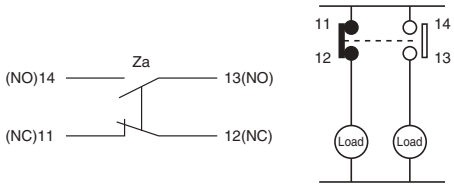

- High-sensitivity/High-precision Switches (WL)

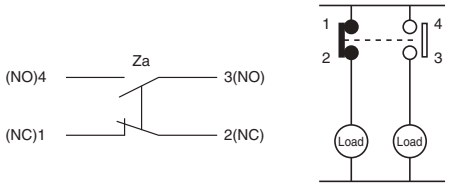

Degree of Protection; IP67

Models with Connectors to Reduce Wiring

A neon lamp or LED indicates the operating status. This makes startup checks and maintenance easy.

Sensor I/O Connector Models to Match Wiring Specifications

Direct-wire types and pre-wired types are available for easy replacement of limit switches.

Product Configuration

		Head/Actuator		Operating Characteristic	Typical models
General-purpose	Standard *1	Roller Lever Actuators		Basic Switches	WLC□-N
				High-sensitivity Switches	WLG□
				High-precision Switches	WLGCA2
		Plunger Actuators		Basic Switches	WLD□-N WLSD□-N
		Flexible Rod Actuators		Basic Switches	WLNJ-□-N
		Fork Lock Lever Actuator		Retention type Switches	WLCA32-4□-N
	Operation indicators *1	Roller Lever Actuators	Indicator-equipped Switches:Neon lamps	Basic Switches	WLC□-LE-N
				High-sensitivity Switches	WLG□-LE
				High-precision Switches	WLGCA2-LE
			Indicator-equipped Switches: Light emitting diodes (LED)	Basic Switches	WLC□-LD-N
				High-sensitivity Switches	WLG□-LD
				High-precision Switches	WLGCA2-LD
		Plunger Actuators	Indicator-equipped Switches: Neon lamps	Basic Switches	WLD□-LE-N WLSD□-LE-N
			Indicator-equipped Switches: Light emitting diodes (LED)	Basic Switches	WLD□-LD-N WLSD□-LD-N
		Flexible Rod Actuators	Indicator-equipped Switches: Neon lamps	Basic Switches	WLNJ-□LE-N
			Indicator-equipped Switches: Light emitting diodes (LED)	Basic Switches	WLNJ-□LD-N
		Fork Lock Lever Actuator	Indicator-equipped Switches: Neon lamps	Retention type Switches	WLCA32-4□LE-N
			Indicator-equipped Switches: Light emitting diodes (LED)	Retention type Switches	WLCA32-4□LD-N
	Sensor I/O connectors	Roller Lever Actuators	Direct-wired Types	Basic Switches	WLCA2-LDK□-N
				High-sensitivity Switches	WLG2-LDK□
				High-precision Switches	WLGCA2-LDK□
			Pre-wired Types	Basic Switches	WLCA2-□LD-M1□□-N WLCA2-□LD-D□J-N
				High-sensitivity Switches	WLG2-□LD-M1□□ WLG2-□LD-D□J□
				High-precision Switches	WLGCA2-□LD-M1□□ WLGCA2-□LD-D□J□
		Plunger Actuators	Direct-wired Types	Basic Switches	WLD28-□LDK□-N
			Pre-wired Types	Basic Switches	WLD28-□LD-M1□□-N WLD28-□LD-D□J-N

*1. The standard wiring specification is the Screw terminal type.
*2. Wiring specification: Smart-click type is also available.

		Head/Actuator	Operating Characteristic	Typical models
Environment-resistant *1	Airtight seal *4	Roller Lever Actuators	Basic Switches	WLC□-55-N
			High-sensitivity Switches	WLG□-55
			High-precision Switches	WLGCA2-55
		Plunger Actuators	Basic Switches	WLD□-55-N, WLSD□-55-N
		Flexible Rod Actuators	Basic Switches	WLNJ-□55-N
	Hermetic seal *4	Roller Lever Actuators	Basic Switches	WLC□-139-N
			High-sensitivity Switches	WLG□-139
			High-precision Switches	WLGCA2-139
		Plunger Actuators	Basic Switches	WLD□-139-N, WLSD□-139-N
		Flexible Rod Actuators	Basic Switches	WLNJ-□139-N
	Heat-resistant	Roller Lever Actuators	Basic Switches	WLC□-TH-N
			High-sensitivity Switches	WLG□-TH
			High-precision Switches	WLGCA2-TH
		Plunger Actuators	Basic Switches	WLD□-TH-N, WLSD□-TH-N
		Flexible Rod Actuators	Basic Switches	WLNJ-□TH-N
	Low-temperature	Roller Lever Actuators	Basic Switches	WLC□-TC-N
			High-sensitivity Switches	WLG□-TC
			High-precision Switches	WLGCA2-TC
		Plunger Actuators	Basic Switches	WLD□-TC-N, WLSD□-TC-N
		Flexible Rod Actuators	Basic Switches	WLNJ-□TC-N
	Corrosion-proof	Roller Lever Actuators	Basic Switches	WLC□-RP-N
			High-sensitivity Switches	WLG□-RP
			High-precision Switches	WLGCA2-RP
		Plunger Actuators	Basic Switches	WLD□-RP-N, WLSD□-RP-N
		Flexible Rod Actuators	Basic Switches	WLNJ-□RP-N
	Weather-proof	Roller Lever Actuators	Basic Switches	WLC□-P1-N
			High-sensitivity Switches	WLG□-P1
Spatter-prevention *1 *3		Roller Lever Actuators	Basic Switches	WLCA2-□S-N
			High-sensitivity Switches	WLG2-□S
			High-precision Switches	WLGCA2-□S
		Plunger Actuators	Basic Switches	WLD28-□S-N
Long-life *1 *2 *3		Roller Lever Actuators *4	Basic Switches	WLMCA2-□-N
			High-sensitivity Switches	WLMG2-□
			High-precision Switches	WLMGCA2-□

*1. The standard wiring specification is the Screw terminal type.
*2. Wiring specification: Direct-wire Connector type is also available. Contact your OMRON sales representative for further information.
*3. Wiring specification: Pre-wired Connector type is also available. Contact your OMRON sales representative for further information.
*4. A type with an operation indicator light is also available. For details, see Ordering Information.

Selection

WL-N/WL Actuator Types and Selection

Head	Appearance	Classification	Operating force (OF)	Repeat accuracy *1	Shock and vibration resistance *1	Description
Roller Lever Models		Roller Lever	Medium	★★★ / ★★ *2	★★★	• Can be used over a wide range, from positioning to workpiece detection. • Easy to use because the stroke in the direction of revolution can be set to an angle from 45° to 90° (varies by model), and the lever can be set to any angle over 360°. • High-sensitivity Switches with minimal movement before activation (example: WLG2) and High-precision Switches with high repeatability (example: WLGCA2) are available.
		Adjustable Roller Lever	Medium	★★	★★	• Adjustable length between dog and lever. (Consideration must be given to telegraphing.) • Can be used over a wide range, from positioning to workpiece detection. • High-sensitivity Switches with minimal movement before activation (example: WLG12) are also available.
		Adjustable Rod Lever	Medium	★★	★★	• Suitable for detection of a dog or workpiece with a large amount of play. (Consideration must be given to telegraphing.) • Also good for detection of irregularly shaped workpieces. • Lightest activation (WLCL-N) among rotating-type limit switches. • Rod length is adjustable. • High-sensitivity Switches with minimal movement before activation (example: WLG2) are also available.
Plunger Models		Plunger	Large	★★★	★★★	• High repeatability, good for positioning detection. • The workpiece movement direction and plunger movement direction must be matched so that an unbalanced load is not applied to the plunger.
	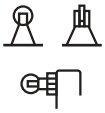	Roller plunger	Large	★★★	★★★	• A wide range of operation is possible by attaching an auxiliary actuator to a cam, dog, cylinder, or other part. • High repeatability, good for positioning detection.
		Ball plunger	Large	★★	★★★	• The tip of the plunger is made of a steel ball, which can be operated in any direction with no limitations. • The ball plunger is convenient when the mounting side is not aligned with the movement direction of the dog or the Limit Switch is actuated by two dogs in X and Y directions.
Flexible rod Models		Coil spring	Small	★	★	• Operation from any direction over 360° is possible, excluding the axial direction. • Lowest activation force of the limit switches. Effective for detection of non-uniform directions and shapes. • Large tolerance for workpiece play because the actuator absorbs movement after activation.
		Resin rod	Small	★	★	• The resin rod minimizes damage to the workpiece. • Operation from any direction over 360° is possible, excluding the axial direction. • Lowest activation force of the limit switches. Effective for detection of non-uniform directions and shapes. • Large tolerance for workpiece play because the actuator absorbs movement after activation.
		Steel wire	Small	★	★	• The steel wire enables easy workpiece length adjustment, and easy bending is possible. • Operation from any direction over 360° is possible, excluding the axial direction. • Lowest activation force of the limit switches. Effective for detection of non-uniform directions and shapes. • Large tolerance for workpiece play because the actuator absorbs movement after activation.
Fork Lock Lever Models		Fork Lock Lever	Medium	★★	★★★	• Self-rotates when operated to a position of 55°, holds state at the 90° position. • Reciprocating motion can be detected with a single dog. • To allow greater deviation in the roller position, two dogs can be used.

*1. Indications for repeat accuracy and shock and vibration resistance are as follows: ★: OK, ★★: Good, ★★★: Excellent
*2. The top line shows High-precision Switches. The bottom line shows Basic Switches.

OMRON will combine the switch, Actuator, and wiring method required to build the ideal switch for your application.

According to Operating Environment

	Environment	Key specifications	Models		
Ambient operating temperature	Normal	−10°C +80°C Water-resistant to IP67.	General-purpose Switches Long-life Switches	Standard model High-sensitivity, High-precision model Standard model High-sensitivity, High-precision model	WL□-N WLG□ WLM□-N WLMG□
Ambient operating temperature	High-temperature	+5°C +120°C To increase heat resistance, the rubber material have been changed.	Environment-resistant, Heat-resistant Switches	Standard model *1 High-sensitivity, High-precision model *1	WL□-TH-N WLG□-TH
Ambient operating temperature	Low-temperature	−40°C +40°C To increase resistance to cold, epichlorhydrin rubber and other measures are used.	Environment-resistant, Low-temperature Switches	Standard model *1 High-sensitivity, High-precision model *1	WL□-TC-N WLG□-TC
Operating environment	Outdoors	A rubber material resistant to temperature changes is used. Stainless steel is used for the screws. The roller is made of stainless steel with superior corrosion resistance.	Environment-resistant, Weather-proof Switches	Standard model *1 High-sensitivity, High-precision model *1	WL□-P1-N WLG□-P1
Operating environment	Chemicals and oil	Corrosion-proof specifications have been used for the housing, fluorine rubber has been used for rubber parts, and stainless steel has been used for screws and nuts (except for the actuator) to increase resistance to oils, chemicals, and weather.	Environment-resistant, Corrosion-proof Switches	Standard model *1 High-sensitivity, High-precision model *1	WL□-RP-N WLG□-RP
Operating environment	Water drops and mist	Uses an airtight built-in switch.	Environment-resistant, Airtight Switches	Standard model *1 High-sensitivity, High-precision model *1	WL□-55-N WLG□-55
Operating environment	Constant water drops and mist	Cables are attached. Uses a general-purpose built-in switch. The cover screws, case cover, and conduit opening are molded from epoxy resin to increase the seal. (The cover cannot be removed.)	Environment-resistant, Molded-terminal Switches	Standard model *1*2 High-sensitivity, High-precision model *1*2	WL□-139-N WLG□-139
Operating environment	Constant water drops and mist	Cables are attached. Uses an airtight built-in switch. The case cover and conduit opening are molded from epoxy resin to increase the seal. (The cover cannot be removed.) The SC connector can be removed, so it is possible to use flexible conduit for the cable.	Environment-resistant, Molded-terminal Switches	Standard model *1*2 High-sensitivity, High-precision model *1*2	WL□-RP40-N WLG□-RP40
Operating environment	Constant water drops and mist	Cables are attached. Uses an airtight built-in switch. The cover screws, case cover, and conduit opening are molded from epoxy resin to increase the seal. (The cover cannot be removed.)	Environment-resistant, Molded-terminal Switches	Standard model *1*2 High-sensitivity, High-precision model *1*2	WL□-140-N WLG□-140
Operating environment	Constant water drops or splattering cutting powder	Cables are attached. Uses an airtight built-in switch. The cover screws, case cover, and conduit opening are molded from epoxy resin to increase the seal. (The cover cannot be removed.) Two-layer seal on actuator rotation shaft. -141: The Head section is molded from epoxy resin; Head direction cannot be changed. -145: The Head section is molded from epoxy resin; Head can be in any of 4 directions.	Environment-resistant, Molded-terminal Switches Environment-resistant, Molded-terminal Switches	Standard model *1*2 High-sensitivity, High-precision model *1*2 Standard model *1*2 High-sensitivity, High-precision model *1*2	WL□-141-N WLG□-141 WL□-145-N WLG□-145
Operating environment	Coolant	Cables are attached. Uses an airtight built-in switch. The cover screws, case cover, conduit opening, and head screws are molded from epoxy resin to increase the seal. (The cover and head cannot be removed.) Rubber parts are made from fluorine rubber to increase resistance to coolant.	Environment-resistant, Anti-coolant Switches	Standard model *1*2 High-sensitivity, High-precision model *1*2	WL□-RP60-N WLG□-RP60
Operating environment	Spattering from welding	To prevent spatter during welding, a heat-resistant resin is used for the indicator cover and screws and rollers are all made from stainless steel.	Spatter-prevention Switches	Standard model High-sensitivity, High-precision model	WL□-□S-N WLG2-□S WLGCA2-□S

*1. Not all functions can be combined with environment-resistant models.
*2. For details on the hermetic structure, see the hermetic mold specifications on pages 40 and 41.

According to Application Conditions

	Conditions	Key specifications	Models		
Load	Switching standard loads	10 A at 125,250, or 500 VAC 0.8 A at 125 VDC 0.4 A at 250 VDC	General-purpose Switches Environment-resistant Switches Spatter-prevention Switches Long-life Switches	Basic/Retention type Switches Basic Switches Basic Switches Basic Switches	WL□-□-N Applicable to either standard loads or microloads.
			General-purpose Switches Environment-resistant Switches Spatter-prevention Switches Long-life Switches	High-sensitivity/High-precision Switches High-sensitivity/High-precision Switches High-sensitivity/High-precision Switches High-sensitivity/High-precision Switches	WL WLG□ WLG□-S WLMG□
	Switching microloads	0.1 A at 125 VAC, resistive load 0.1 A at 30 VDC, resistive load	General-purpose Switches	Basic/Retention type Switches	WL□-□-N Applicable to either standard loads or microloads.
			General-purpose Microload Switches	High-sensitivity/High-precision Switches	WL WL01G□
Durability	Normal durability	Mechanical: 15 million operation min. (10 million operation min. for high-sensitivity models * or flexible rod models)	General-purpose Switches Spatter-prevention Switches	Basic Switches Basic Switches	WL□-N WL□-S-N
			General-purpose Switches Spatter-prevention Switches	High-sensitivity/High-precision Switches High-sensitivity/High-precision Switches	WL WLG□ WLG□-S
	Long-life	Mechanical: 30 million operation min.	Long-life Switches	Basic Switches	WLM□-N
			Long-life Switches	High-sensitivity/ High-precision Switches	WL WLMG□

According to Ease of Installation and Maintenance

	Conditions	Key specifications	Models		
Operation indicator	Daily inspections and maintenance checks	Neon lamp 125 to 250 VAC Switching light-ON between operating/not operating. (Switching is not possible for Switches with Molded Terminals.)	General-purpose, Indicator-equipped Switches	Basic Switches High-sensitivity/High-precision Switches	WL□-LE-N WLG□-LE
			Spatter-prevention Switches	Basic Switches High-sensitivity/High-precision Switches	WL□-LES-N WLG□-LES
		LED 10 to 115 VAC/DC Switching light-ON between operating/not operating. (Switching not possible for models with molded terminals.)	General-purpose, Indicator-equipped Switches	Basic Switches High-sensitivity/High-precision Switches	WL□-LD-N WLG□-LD
			Spatter-prevention Switches	Basic Switches High-sensitivity/High-precision Switches	WL□-LDS-N WLG□-LDS
Wiring specification	Screw tightening and installation	Screw terminals. No ground terminal. Conduit size: G1/2	General-purpose Switches	Basic Switches High-sensitivity/High-precision Switches	WL□-N WLG□
			Long-life Switches	Basic Switches High-sensitivity/High-precision Switches	WLM□-N WLMG□
		Screw terminals. Ground terminal. Conduit size: 4 sizes	General-purpose Switches	Basic Switches High-sensitivity/High-precision Switches	WL□-N WLG□
	One-touch connector attachment	Direct-wired connector, 2-conductor. Greatly reduces wiring work.	General-purpose Switches	Basic Switches High-sensitivity/High-precision Switches	WL□-□LDK13□-N WLG□-□LDK13□
			Long-life Switches	Basic Switches High-sensitivity/High-precision Switches	WLM□-LDK13□-N WLMG□-□LDK13□
		Direct-wired connector, 4-conductor. Greatly reduces wiring work.	General-purpose Switches	Basic Switches High-sensitivity/High-precision Switches	WL□-□LDK43□-N WLG□-□LDK43□
			Long-life Switches	Basic Switches High-sensitivity/High-precision Switches	WLM□-LDK43□-N WLMG□-□LDK43□
	Connector attachment in control and relay boxes	Pre-wired connector, 2-conductor. Greatly reduces wiring work. Smartclick connectors for even easier maintenance.	General-purpose Switches	Basic Switches High-sensitivity/High-precision Switches	WL□-□LD-M1□J-N WLG□-□LD-M1□J
			Spatter-prevention Switches	Basic Switches High-sensitivity/High-precision Switches	WL□-□S-M1□J-1-N WLG□-□S-M1□J-1
			Long-life Switches	Basic Switches High-sensitivity/High-precision Switches	WLM□-LD-M1□J-N WLMG□-LD-M1□J
		Pre-wired connector, 4-conductor. Greatly reduces wiring work. Smartclick connectors for even easier maintenance.	General-purpose Switches	Basic Switches High-sensitivity/High-precision Switches	WL□-□LD-□GJ-N WLG□-□LD-□GJ□
			Spatter-prevention Switches	Basic Switches High-sensitivity/High-precision Switches	WL□-□S-□GJS-N WLG□-□S-□GJS□
			Long-life Switches	Basic Switches High-sensitivity/High-precision Switches	WLM□-LD-□GJ-N WLMG□-LD-□GJ□

Application Examples

Detection of Passing Pallets on Production Lines

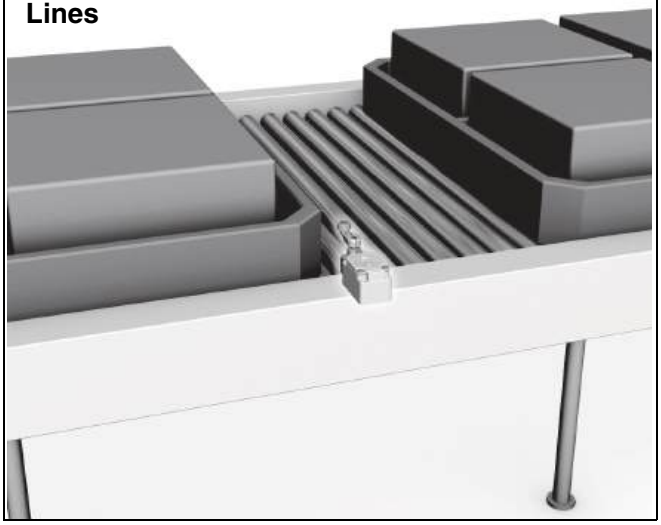

Detection of Work Table Origins (X, Y, and Z) on Machine Tools

Detection of Forward and Reverse Movement of Hydraulic Cylinders on Molding Machines

Detection of Arm Movement on Welding Robots

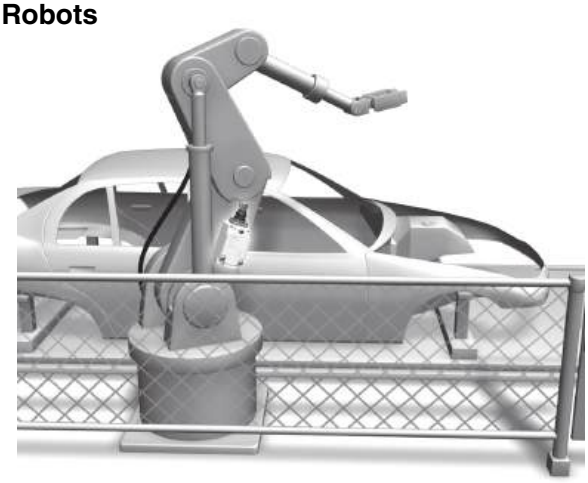

Detection of Car Pallet Positions in Parking Towers

Detection of Vertical Limits on Conveyor Systems

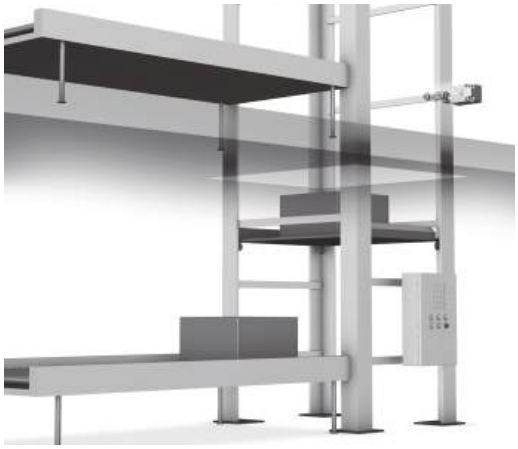

Model Number Structure

Model Number Legend (Not all combinations are possible. Ask your OMRON representative for details.)

General-purpose Switches

Standard Switches **Operation indicator Switches** **Basic and Retention type Switches**

WL□-□□□□-N
(1) (2) (3) (4) (5)

(1) Actuator and Property Specifications

Code	Actuator
CA2	Roller lever: R38 mm
CA2-7	Roller lever: R50 mm
CA2-8	Roller lever: R63 mm
CA12	Adjustable roller lever: R25 to 89 mm
CL	Adjustable rod lever: 25 to 140 mm
CAL4	Adjustable rod lever: 350 to 380 mm
CAL5	Rod spring lever
CA2-2	Roller lever: R38 mm
CA12-2	Adjustable roller lever: R25 to 89 mm
CL-2	Adjustable rod lever: 25 to 140 mm
CA2-2N	Roller lever: R38 mm
CA12-2N	Adjustable roller lever: R25 to 89 mm
CL-2N	Adjustable rod lever: 25 to 140 mm
CA32-41	Fork lock lever
CA32-42	Fork lock lever
CA32-43	Fork lock lever
D18	Sealed top plunger
D28	Sealed top-roller plunger
D38	Sealed top-ball plunger
D2	Top-roller plunger
SD	Horizontal plunger
SD2	Horizontal-roller plunger
SD3	Horizontal-ball plunger
NJ	Flexible rod: Coil spring
NJ-30	Flexible rod: Coil spring, multi-wire
NJ-2	Flexible rod: Resin rod
NJ-S2	Flexible rod: Steel wire

(2) Built-in Switch Specifications

Code	Specifications
Blank	Standard built-in switch
55	Airtight built-in switch

(3) Conduit Size, Ground Terminal Specifications

Code	Specifications	
	Conduit Size	Ground terminal
Blank	G1/2	None
G1	G1/2	Provided *
G	Pg13.5	
Y	M20	
TS	1/2-14NPT	

* Models with ground terminals are certified for EN/IEC (CE Marking).

(4) Indicator Specifications

Code	Specifications
Blank	No indicator
LE	Neon lamp: 125 to 250 VAC
LD	LED (10 to 115 VAC/DC)

(5) Lever Specifications

Code	Specifications
Blank	Standard lever (Allen-head bolt)
A	Double nut lever

Model Number Legend (Not all combinations are possible. Ask your OMRON representative for details.)

General-purpose Switches

Standard Switches **Operation indicator Switches** **High-sensitivity and High-precision Switches**

WL□□-□□□□□□□□
(1) (2) (3) (4) (5) (6) (7) (8) (9) (10)

(1) Electrical Rating

Code	Specifications
Blank	Standard load
01	Microload

(2) Actuator and Property Specifications

Code	Actuator
G2	Roller lever: R38 mm High-sensitivity
GCA2	Roller lever: R38 mm High-precision
G12	Adjustable roller lever: R25 to 89 mm High-sensitivity
GL	Adjustable roller lever: 25 to 140 mm High-sensitivity

(3) Built-in Switch Specifications

Code	Specifications
Blank	Standard built-in switch
55	Airtight built-in switch

(4) Conduit Size, Ground Terminal Specifications

Code	Specifications	
	Conduit Size	Ground terminal
Blank	G1/2	None
G1	G1/2	Provided *
G	Pg13.5	
Y	M20	
TS	1/2-14NPT	

* Models with ground terminals are certified for EN/IEC (CE Marking).

(5) Indicator Type

Code	Specifications
Blank	No indicator
LE	Neon lamp: 125 to 250 VAC
LD	LED (10 to 115 VAC/DC)

(6) Lever Type

Code	Specifications
Blank	Standard lever (Allen-head bolt)
A	Double nut lever

Model Number Legend (Not all combinations are possible. Ask your OMRON representative for details.)

General-purpose Switches

Sensor I/O Connector Switches **Basic and Retention type Switches**

WL□-□LD□-N
(1) (2) (3) (4)

(1) Actuator and Property Specifications

Code	Actuator
CA2	Roller lever: R38 mm
D28	Sealed top-roller plunger
D2	Top-roller plunger

(2) Built-in Switch Specifications

Code	Specifications
Blank	Standard built-in switch
55	Airtight built-in switch

(3) Indicator Specifications

Code	Specifications
LD	LED (10 to 115 VAC/DC)

(4) Connector Type Wiring Specifications

Code	Specifications				
	Shape		Voltage *1	Wiring locations	Connector pin No. *2
K13A	Direct-wire Connector type	Threaded (M12)	AC	NO only	NO: ③ ④
K13			DC	NO only	NO: ③ ④
K43A			AC	NC+NO	NC: ① ②, NO: ③ ④
K43			DC	NC+NO	NC: ① ②, NO: ③ ④
-M1J	Pre-wired Connector type *3	Threaded (M12)	DC	NO only	NO: ③ ④
-M1GJ			DC	NO only	NO: ① ④
-M1JB			DC	NC only	NC: ③ ②
-AGJ			AC	NC+NO	NC: ① ②, NO: ③ ④
-DGJ			DC	NC+NO	NC: ① ②, NO: ③ ④
-DK1EJ			DC	NO only	NC: ②, NO: ③ ④
-M1TJ		Smartclick	DC	NO only	NO: ③ ④
-M1TGJ			DC	NO only	NO: ① ④
-M1TJB			DC	NC only	NC: ③ ②
-DTGJ			DC	NC+NO	NC: ① ②, NO: ③ ④
-DTK1EJ			DC	NO only	NC: ②, NO: ③ ④

*1. DC models are certified for EN/IEC (CE Marking).
*2. Refer to *Contact Forms* on page 21 for details on connector pin numbers.
*3. The standard cable length is 0.3 m. Contact your OMRON representative for information on other cable lengths.

Model Number Legend (Not all combinations are possible. Ask your OMRON representative for details.)

General-purpose Switches

Sensor I/O Connector Switches **High-sensitivity and High-precision Switches**

WL□□-□LD□-N
(1) (2) (3) (4) (5)

(1) Electrical Rating

Code	Specifications
Blank	Standard load
01	Microload

(2) Actuator and Property Specifications

Code	Actuator
G2	Roller lever: R38 mm High-sensitivity
GCA2	Roller lever: R38 mm High-precision

(3) Built-in Switch Specifications

Code	Specifications
Blank	Standard built-in switch
55	Airtight built-in switch

(4) Indicator Specifications

Code	Specifications
LD	LED (10 to 115 VAC/DC)

(5) Connector Type Wiring Specifications

Code	Specifications				
	Shape		Voltage *1	Wiring locations	Connector pin No. *2
K13A	Direct-wire Connector type	Threaded (M12)	AC	NO only	NO: ③ ④
K13			DC	NO only	NO: ③ ④
K43A			AC	NC+NO	NC: ① ②, NO: ③ ④
K43			DC	NC+NO	NC: ① ②, NO: ③ ④
-M1J *1	Pre-wired Connector type *3		DC	NO only	NO: ③ ④
-M1GJ *1			DC	NO only	NO: ① ④
-M1JB			DC	NC only	NC: ③ ②
-AGJ03			AC	NC+NO	NC: ① ②, NO: ③ ④
-DGJ03 *1			DC	NC+NO	NC: ① ②, NO: ③ ④
-DK1EJ03 *1			DC	NO only	NC: ②, NO: ③ ④

*1. DC models are certified for EN/IEC (CE Marking).
*2. Refer to *Contact Forms* on page 21 for details on connector pin numbers.
*3. The standard cable length is 0.3 m. Contact your OMRON representative for information on other cable lengths.

Model Number Legend (Not all combinations are possible. Ask your OMRON representative for details.)

Environment-resistant Switches **Basic Switches**

WL□-□□□□□□□□-N
(1) (2) (3) (4) (5) (6) (7) (8) (9)

(1) Actuator and Property Specifications

Code	Actuator
CA2	Roller lever: R38 mm
CA2-7	Roller lever: R50 mm
CA2-8	Roller lever: R63 mm
CA12	Adjustable roller lever: R25 to 89 mm
CL	Adjustable rod lever: 25 to 140 mm
CAL4	Adjustable rod lever: 350 to 380 mm
CAL5	Rod spring lever
CA2-2	Roller lever: R38 mm
CA12-2	Adjustable roller lever: R25 to 89 mm
CL-2	Adjustable rod lever: 25 to 140 mm
CA2-2N	Roller lever: R38 mm
CA12-2N	Adjustable roller lever: R25 to 89 mm
CL-2N	Adjustable rod lever: 25 to 140 mm
CA32-41	Fork lock lever
CA32-42	Fork lock lever
CA32-43	Fork lock lever
D18	Sealed top plunger
D28	Sealed top-roller plunger
D38	Sealed top-ball plunger
D2	Top-roller plunger
SD	Horizontal plunger
SD2	Horizontal-roller plunger
SD3	Horizontal-ball plunger
NJ	Flexible rod: Coil spring
NJ-30	Flexible rod: Coil spring, multi-wire
NJ-2	Flexible rod: Resin rod
NJ-S2	Flexible rod: Steel wire

(2) Environment-resistant Model Specifications

Code	Specifications
Blank	Standard
RP	Corrosion-proof
P1	Weather-resistant

(3) Built-in Switch Specifications

Code	Specifications
Blank	Standard built-in switch
55	Airtight built-in switch

(4) Temperature Specifications

Code	Specifications
Blank	Standard: -10 to +80°C
TH	Heat-resistant: -5 to +120°C *1
TC	Low-temperature: -40 to +40°C *1

*1. Cannot be combined with Corrosion-proof (RP) or Weather-proof (P1) Switches.

(5) Hermetic Specifications

Code	Specifications
Blank	No cable molding.
139	Standard built-in switch. Cable is attached. Molded conduit opening and cover. (The cover cannot be removed.)
140	Airtight built-in switch. Cable is attached. Molded conduit opening, cover, and cover screws. (The cover cannot be removed.)
141	Conduit opening, cover, head, cover attachment screw part, air-tight built-in switch. Cable is attached. Molded head screws. (The cover cannot be removed and the head direction cannot be changed.) Two-layer seal on actuator rotation shaft.
145	Airtight built-in switch. Cable is attached. Molded conduit opening, cover, and cover screws. (The cover cannot be removed. The head can be mounted in any of 4 directions.) Two-layer seal on actuator rotation shaft.
RP40	Airtight built-in switch. Cable is attached. Molded conduit opening and cover. (The cover cannot be removed.) SC Connector can be removed, so it is possible to use flexible conduits for the cable.
RP60	Airtight built-in switch. Cable is attached. Molded conduit opening, cover, cover screws, and head screws. (The cover cannot be removed and the head direction cannot be changed.) Fluorine rubber is used for all rubber parts.

(6) Conduit Size, Ground Terminal Specifications

Code	Specifications	
	Conduit Size	Ground terminal
Blank	G1/2	None
G1	G1/2	Provided *2
G	Pg13.5	
Y	M20	
TS	1/2-14NPT	

*2. Models with ground terminals are certified for EN/IEC (CE Marking).

(7) Indicator Specifications

Code	Specifications
Blank	No indicator
LE	Neon lamp: 125 to 250 VAC *3
LD	LED (10 to 115 VAC/DC) *3

*3. Cannot be combined with Corrosion-proof (RP), Weather-proof (P1), Heat-resistant (TC), or Low-temperature (TC) Switches.

(8) Indicator Wiring Specifications

Code	Specifications
2	NC connection: Light-ON when operating *4
3	NO connection: Light-ON when not operating *4

*4. Always include the indicator wiring specification if you specify a (5) hermetic structure and an (7) indicator.

(9) Lever Type

Code	Specifications
Blank	Standard lever (Allen-head bolt)
A	Double nut lever

Model Number Legend (Not all combinations are possible. Ask your OMRON representative for details.)

Environment-resistant Switches | **High-sensitivity and High-precision Switches**

WL□□-□□□□□□□□
(1) (2) (3) (4) (5) (6) (7) (8) (9) (10)

(1) Electrical Rating

Code	Specifications
Blank	Standard load
01	Microload

(2) Actuator and Property Specifications

Code	Actuator
G2	Roller lever: R38 mm High sensitivity
GCA2	Roller lever: R38 mm High-precision
G12	Adjustable roller lever: R25 to 89 mm High sensitivity
GL	Adjustable rod lever: 25 to 140 mm High sensitivity

(3) Environment-resistant Model Specifications

Code	Specifications
Blank	Standard
RP	Corrosion-proof
P1	Weather-proof

(4) Built-in Switch Specifications

Code	Specifications
Blank	Standard built-in switch
55	Airtight built-in switch

(5) Temperature Specifications

Code	Specifications
Blank	Standard: -10 to +80°C
TH	Heat-resistant: -5 to +120°C *1
TC	Low-temperature: -40 to +40°C *1

*1. Cannot be combined with Corrosion-proof (RP) or Weather-proof (P1) Switches.

(6) Hermetic Specification

Code	Specifications
Blank	No cable molding.
139	Standard built-in switch. Cable is attached. Molded conduit opening and cover. (The cover cannot be removed.)
140	Airtight built-in switch. Cable is attached. Molded conduit opening, cover, and cover screws. (The cover cannot be removed.)
141	Conduit opening, cover, head, cover attachment screw part, air-tight built-in switch. Cable is attached. Molded head screws. (The cover cannot be removed and the head direction cannot be changed.) Two-layer seal on actuator rotation shaft.
145	Airtight built-in switch. Cable is attached. Molded conduit opening, cover, and cover screws. (The cover cannot be removed. The head can be mounted in any of 4 directions.) Two-layer seal on actuator rotation shaft.
RP40	Airtight built-in switch. Cable is attached. Molded conduit opening and cover. (The cover cannot be removed.) SC Connector can be removed, so it is possible to use flexible conduits for the cable.
RP60	Airtight built-in switch. Cable is attached. Molded conduit opening, cover, cover screws, and head screws. (The cover cannot be removed and the head direction cannot be changed.) Fluorine rubber is used for all rubber parts.

(7) Conduit Size, Ground Terminal Specifications

Code	Specifications	
	Conduit Size	Ground terminal
Blank	G1/2	None
G1	G1/2	Provided *2
G	Pg13.5	
Y	M20	
TS	1/2-14NPT	

*2. Models with ground terminals are certified for EN/IEC (CE Marking).

(8) Indicator Type

Code	Specifications
Blank	No indicator
LE	Neon lamp: 125 to 250 VAC *3
LD	LED (10 to 115 VAC/DC) *3

*3. Cannot be combined with Corrosion-proof (RP), Weather-proof (P1), Heat-resistant (TC), or Low-temperature (TC) Switches.

(9) Indicator Wiring Specification

Code	Specifications
2	NC connection: Light-ON when operating *4
3	NO connection: Light-ON when not operating *4

*4. Always include the indicator wiring specification if you specify a (6) hermetic structure and an (8) indicator.

(10) Lever Type

Code	Specifications
Blank	Standard lever (Allen-head bolt)
A	Double nut lever

Model Number Legend (Not all combinations are possible. Ask your OMRON representative for details.)

Spatter-prevention Switches — Basic Switches

WL□ - □ □ S□ -N
(1) (2) (3) (4)

(1) Actuator and Property Specifications

Code	Actuator
CA2	Roller lever: R38 mm
D28	Sealed top-roller plunger

(2) Built-in Switch Specifications

Code	Specifications
Blank	Standard built-in switch
55	Airtight built-in switch

(3) Indicator Specifications

Code	Specifications
LE	Neon lamp: 125 to 250 VAC *1
LD	LED (10 to 115 VAC/DC)

*1. Cannot be combined with a (4) Connector Type Wiring Specifications.

(4) Connector Type Wiring Specifications

Code	Specifications				
	Shape		Voltage *2	Wiring locations	Connector pin No. *3
Blank	Screw terminal type		---	---	---
-M1J-1	Pre-wired Connector type *4	Threaded (M12)	DC	NO only	NO: ③ ④
-M1GJ-1			DC	NO only	NO: ① ④
-DGJS			DC	NC+NO	NC: ① ②, NO: ③ ④
-DTGJS		Smartclick	DC	NC+NO	NC: ① ②, NO: ③ ④

*2. DC models are certified for EN/IEC (CE Marking).
*3. Refer to *Contact Forms* on page 21 for details on connector pin numbers.
*4. The standard cable length is 0.3 m. Contact your OMRON representative for information on other cable lengths.

Spatter-prevention Switches — High-sensitivity and High-precision Switches

WL□ □ - □ □ S□
(1) (2) (3) (4) (5)

(1) Electrical Rating

Code	Specifications
Blank	Standard load
01	Microload

(2) Actuator and Property Specifications

Code	Actuator
Blank	Roller lever: R38 High-sensitivity
GCA2	Roller lever: R38 High-precision

(3) Built-in Switch Specifications

Code	Specifications
Blank	Standard built-in switch
55	Airtight built-in switch

(4) Indicator Specifications

Code	Specifications
LE	Neon lamp: 125 to 250 VAC *1
LD	LED (10 to 115 VAC/DC)

*1. Cannot be combined with a (5) Connector Type Wiring Specifications.

(5) Connector Type Wiring Specifications

Code	Specifications				
	Shape		Voltage *2	Wiring locations	Connector pin No. *3
Blank	Screw terminal type		---	---	---
-M1J -1	Pre-wired Connector type *4	Threaded (M12)	DC	NO only	NO: ③ ④
-M1GJ -1			DC	NO only	NO: ① ④
-DGJS03			DC	NC+NO	NC: ① ②, NO: ③ ④

*2. DC models are certified for EN/IEC (CE Marking).
*3. Refer to *Contact Forms* on page 21 for details on connector pin numbers.
*4. The standard cable length is 0.3 m. Contact your OMRON representative for information on other cable lengths.

Model Number Legend (Not all combinations are possible. Ask your OMRON representative for details.)

Long-life Switches **Basic Switches**

WLM□ - LD□ -N
(1) (2) (3)

(1) Actuator and Property Specifications

Code	Actuator
CA2	Roller lever: R38 mm

(2) Indicator Type

Code	Specifications
LD	LED (10 to 115 VAC/DC)

(3) Connector Type Wiring Specifications

Code	Specifications				
	Shape		Voltage	Wiring locations	Connector pin No. *1
Blank	Screw terminal type		---	---	---
K13A	Direct-wire Connector type	Threaded (M12)	AC	NO only	NO: ③ ④
K13			DC	NO only	NO: ③ ④
K43A			AC	NC+NO	NC: ① ②, NO: ③ ④
K43			DC	NC+NO	NC: ① ②, NO: ③ ④
-M1J	Pre-wired Connector type *2	Threaded (M12)	DC	NO only	NO: ③ ④
-AGJ			AC	NC+NO	NC: ① ②, NO: ③ ④
-DGJ			DC	NC+NO	NC: ① ②, NO: ③ ④
-M1TJ		Smartclick	DC	NO only	NO: ③ ④
-DTGJ			DC	NC+NO	NC: ① ②, NO: ③ ④

*1. Refer to *Contact Forms* on page 21 for details on connector pin numbers.
*2. The standard cable length is 0.3 m. Contact your OMRON representative for information on other cable lengths.

Long-life Switches **High-sensitivity and High-precision Switches**

WLM□ - LD□
(1) (2) (3)

(1) Actuator and Property Specifications

Code	Actuator
G2	Roller lever: R38 mm High-sensitivity
GCA2	Roller lever: R38 mm High-precision

(2) Indicator Type

Code	Specifications
LD	LED (10 to 115 VAC/DC)

(3) Connector Type Wiring Specifications

Code	Specifications				
	Shape		Voltage	Wiring locations	Connector pin No. *1
Blank	Screw terminal type		---	---	---
K13A	Direct-wire Connector type	Threaded (M12)	AC	NO only	NO: ③ ④
K13			DC	NO only	NO: ③ ④
K43A			AC	NC+NO	NC: ① ②, NO: ③ ④
K43			DC	NC+NO	NC: ① ②, NO: ③ ④
-M1J	Pre-wired Connector type *2		DC	NO only	NO: ③ ④
-AGJ03			AC	NC+NO	NC: ① ②, NO: ③ ④
-DGJ03			DC	NC+NO	NC: ① ②, NO: ③ ④

*1. Refer to *Contact Forms* on page 21 for details on connector pin numbers.
*2. The standard cable length is 0.3 m. Contact your OMRON representative for information on other cable lengths.

Ordering Information

General-purpose Switches

Standard Switches

Switches with Roller Lever Actuators

Basic Switches

Actuator	Roller lever: R38	Roller lever: R50	Roller lever: R63
Pretravel (PT)	Model	Model	Model
15±5°	WLCA2-N	WLCA2-7-N	WLCA2-8-N
25±5°	WLCA2-2-N	—	—
20° max.	WLCA2-2N-N	—	—

Actuator	Adjustable roller lever	Adjustable rod lever: 25 to 140 mm	Adjustable rod lever: 350 to 380 mm	Rod spring lever
Pretravel (PT)	Model	Model	Model	Model
15±5°	WLCA12-N	WLCL-N	WLCAL4-N	WLCAL5-N
25±5°	WLCA12-2-N	WLCL-2-N	—	—
20° max.	WLCA12-2N-N	WLCL-2N-N	—	—

High-sensitivity Switches

Actuator	Roller lever: R38	Adjustable roller lever	Adjustable rod lever: 25 to 140 mm
Load	Model	Model	Model
Standard load	WLG2	WLG12	WLGL
Microload	WL01G2	WL01G12	WL01GL

High-precision Switches

Actuator	Roller lever: R38
Load	Model
Standard load	WLGCA2
Microload	WL01GCA2

Switches with Plunger Actuators

Basic Switches

Actuator	Sealed Top Plunger	Sealed Top-roller plunger	Sealed Top-ball plunger	Top-roller plunger
Pretravel (PT)	Model	Model	Model	Model
1.7 mm max.	WLD18-N	WLD28-N	WLD38-N	WLD2-N

Actuator	Horizontal plunger	Horizontal-roller plunger	Horizontal-ball plunger
Pretravel (PT)	Model	Model	Model
2.8 mm max.	WLSD-N	WLSD2-N	WLSD3-N

Switches with Flexible Rod Actuators

Basic Switches

Actuator	Coil spring (spring diameter: 6.5)	Coil spring (spring diameter: 4.8)
Pretravel (PT)	Model	Model
20±10 mm	WLNJ-N	WLNJ-30-N

Actuator	Resin rod (rod diameter: 8)	Steel wire (wire diameter: 1)
Pretravel (PT)	Model	
40±20 mm	WLNJ-2-N	WLNJ-S2-N

Switches with Fork Lock Lever Actuator

Retention type Switches

Actuator	Fork lock lever	Fork lock lever	Fork lock lever	Fork lock lever
Pretravel (PT)	Model	Model	Model	Model
55° max.	WLCA32-41-N	WLCA32-42-N	WLCA32-43-N	WLCA32-44-N

General-purpose Switches

Operation indicator Switches

Switches with Roller Lever Actuators

Basic Switches

	Actuator	Roller lever: R38	Roller lever: R50	Roller lever: R63
Indicator *	Pretravel (PT)	Model	Model	Model
Neon lamp	15±5°	WLCA2-LE-N	WLCA2-7LE-N	WLCA2-8LE-N
	25±5°	WLCA2-2LE-N	—	—
	20° max.	WLCA2-2NLE-N	—	—
LED	15±5°	WLCA2-LD-N	WLCA2-7LD-N	WLCA2-8LD-N
	25±5°	WLCA2-2LD-N	—	—
	20° max.	WLCA2-2NLD-N	—	—

	Actuator	Adjustable roller lever	Adjustable rod lever: 25 to 140 mm	Adjustable rod lever: 350 to 380 mm	Rod Spring Lever
Indicator *	Pretravel (PT)	Model	Model	Model	Model
Neon lamp	15±5°	WLCA12-LE-N	WLCL-LE-N	WLCAL4-LE-N	WLCAL5-LE-N
	25±5°	WLCA12-2LE-N	WLCL-2LE-N	—	—
	20° max.	WLCA12-2NLE-N	WLCL-2NLE-N	—	—
LED	15±5°	WLCA12-LD-N	WLCL-LD-N	WLCAL4-LD-N	WLCAL5-LD-N
	25±5°	WLCA12-2LD-N	WLCL-2LD-N	—	—
	20° max.	WLCA12-2NLD-N	WLCL-2NLD-N	—	—

High-sensitivity Switches

	Actuator	Roller lever R38
Indicator *	Pretravel (PT)	Model
Neon lamp	$10^{\circ}{}^{+2^{\circ}}_{-1^{\circ}}$	WLG2-LE
LED		WLG2-LD

	Actuator	Adjustable roller lever	Adjustable rod lever: 25 to 140 mm
Indicator *	Pretravel (PT)	Model	Model
Neon lamp	$10^{\circ}{}^{+2^{\circ}}_{-1^{\circ}}$	WLG12-LE	WLGL-LE
LED		WLG12-LD	WLGL-LD

High-precision Switches

	Actuator	Roller lever R38
Indicator *	Pretravel (PT)	Model
Neon lamp	$5^{\circ}{}^{+2^{\circ}}_{0^{\circ}}$	WLGCA2-LE
LED		WLGCA2-LD

Switches with Fork Lock Lever Actuator

Retention type Switches

	Actuator	Fork lock lever	Fork lock lever	Fork lock lever
Indicator *	Pretravel (PT)	Model	Model	Model
Neon lamp	55° max.	WLCA32-41LE-N	WLCA32-42LE-N	WLCA32-43LE-N
LED		WLCA32-41LD-N	—	WLCA32-43LD-N

* The default setting is light-ON when not operating (NO wiring). Turn the lamp holder by 180° to change the setting to light-ON when operating (NC wiring).

Switches with Plunger Actuators

Basic Switches

	Actuator	Sealed Top plunger	Sealed Top-roller plunger	Sealed Top-ball plunger	Top-roller plunger
Indicator *	Pretravel (PT)	Model	Model	Model	Model
Neon lamp	1.7 mm max.	WLD18-LE-N	WLD28-LE-N	WLD38-LE-N	WLD2-LE-N
LED		WLD18-LD-N	WLD28-LD-N	WLD38-LD-N	WLD2-LD-N

	Actuator	Horizontal plunger	Horizontal-roller plunger	Horizontal-ball plunger
Indicator *	Pretravel (PT)	Model	Model	Model
Neon lamp	2.8 mm max.	WLSD-LE-N	WLSD2-LE-N	WLSD3-LE-N
LED		WLSD-LD-N	WLSD2-LD-N	WLSD3-LD-N

Switches with Flexible Rod Actuators

Basic Switches

	Actuator	Coil spring (spring diameter: 6.5)	Coil spring (spring diameter: 8)
Indicator *	Pretravel (PT)	Model	Model
Neon lamp	20±10 mm	WLNJ-LE-N	WLNJ-30LE-N
LED		WLNJ-LD-N	WLNJ-30LD-N

	Actuator	Resin rod (rod diameter: 8)	Steel wire (wire diameter: 1)
Indicator *	Pretravel (PT)	Model	Model
Neon lamp	40±20 mm	WLNJ-2LE-N	WLNJ-S2LE-N
LED		WLNJ-2LD-N	WLNJ-S2LD-N

* The default setting is light-ON when not operating (NO wiring). Turn the lamp holder by 180° to change the setting to light-ON when operating (NC wiring).

General-purpose Switches

Sensor I/O Connector Switches

Switches with Direct-wired Connectors

Basic Switches

					Actuator	Roller lever: R38	Sealed Top-roller plunger
Connector shape	Built-in switch specification	Voltage	Wiring Specifications	Connector pin No.	Pretravel (PT)	Model	Model
Threaded	General-purpose	AC	NO only 2 core	NO ③ ④	15±5°	WLCA2-LDK13A-N	—
			NC + NO 4 core	NC ① ② NO ③ ④		WLCA2-LDK43A-N	—
		DC	NO only 2 core	NO ③ ④		WLCA2-LDK13-N	WLD28-LDK13-N
			NC + NO 4 core	NC ① ② NO ③ ④		WLCA2-LDK43-N	WLD28-LDK43-N
	Airtight	DC	NO only 2 core	NO ③ ④		WLCA2-55LDK13-N	WLD28-55LDK13-N
			NC + NO 4 core	NC ① ② NO ③ ④		WLCA2-55LDK43-N	WLD28-55LDK43-N

High-sensitivity Switches

					Actuator	Roller lever: R38
Connector shape	Built-in switch specification	Voltage	Wiring Specifications	Connector pin No.	Pretravel (PT)	Model
Threaded	General-purpose	DC	NO only 2 core	NO ③ ④	$10^{\circ}{}^{+2^{\circ}}_{-1^{\circ}}$	WLG2-LDK13
			NC + NO 4 core	NC ① ② NO ③ ④		WLG2-LDK43
	Airtight		NO only 2 core	NO ③ ④		WLG2-55LDK13
			NC + NO 4 core	NC ① ② NO ③ ④		WLG2-55LDK43

High-precision Switches

					Actuator	Roller lever: R38
Connector shape	Built-in switch specification	Voltage	Wiring Specifications	Connector pin No.	Pretravel (PT)	Model
Threaded	General-purpose	DC	NO only 2 core	NO ③ ④	$5^{\circ}{}^{+2^{\circ}}_{0^{\circ}}$	WLGCA2-LDK13
			NC + NO 4 core	NC ① ② NO ③ ④		WLGCA2-LDK43
	Airtight		NO only 2 core	NO ③ ④		WLGCA2-55LDK13
			NC + NO 4 core	NC ① ② NO ③ ④		WLGCA2-55LDK43

Note: The default setting is light-ON when not operating (NO wiring).
Turn the lamp holder by 180° to change the setting to light-ON when operating (NC wiring).
(However, Four-core Switches cannot be switched to light-ON when operating (NC wiring).)

Switches with Pre-wired Connectors

Basic Switches

						Actuator	Roller lever: R38	Sealed Top-roller Plunger
Connector shape	Built-in switch specification	Voltage	Wiring Specifications	Connector pin No.	Pretravel (PT)		Model	Model
Threaded *	General-purpose	DC	NO only 2 core	NO ③ ④	15±5°		WLCA2-LD-M1J-N	WLD28-LD-M1J-N
				NO ① ④			WLCA2-LD-M1GJ-N	WLD28-LD-M1GJ-N
			NC only 2 core	NC ③ ②			WLCA2-LD-M1JB-N	—
			NC + NO 4 core	NC ① ② NO ③ ④			WLCA2-LD-DGJ-N	WLD28-LD-DGJ-N
			NO only 3 core	NO ③ ④ NC ②			WLCA2-LD-DK1EJ-N	WLD28-LD-DK1EJ-N
	Airtight		NO only 2 core	NO ③ ④			WLCA2-55LD-M1J-N	WLD28-55LD-M1J-N
				NO ① ④			WLCA2-55LD-M1GJ-N	WLD28-55LD-M1GJ-N
			NC only 2 core	NC ③ ②			WLCA2-55LD-M1JB-N	WLD28-55LD-M1JB-N
			NC + NO 4 core	NC ① ② NO ③ ④			WLCA2-55LD-DGJ-N	—
			NO only 3 core	NO ③ ④ NC ②			WLCA2-55LD-DK1EJ-N	WLD28-55LD-DK1EJ-N

High-sensitivity Switches

						Actuator	Roller lever: R38
Connector shape	Built-in switch specification	Voltage	Wiring Specifications	Connector pin No.	Pretravel (PT)		Model
Threaded *	General-purpose	DC	NO only 2 core	NO ③ ④	10° $^{+2°}_{-1°}$		WLG2-LDK13
			NC + NO 4 core	NC ① ② NO ③ ④			WLG2-LDK43
	Airtight		NO only 2 core	NO ③ ④			WLG2-55LDK13
			NC + NO 4 core	NC ① ② NO ③ ④			WLG2-55LDK43

High-precision Switches

						Actuator	Roller lever: R38
Connector shape	Built-in switch specification	Voltage	Wiring Specifications	Connector pin No.	Pretravel (PT)		Model
Threaded *	General-purpose	DC	NO only 2 core	NO ③ ④	5° $^{+2°}_{0°}$		WLG2-LDK13
			NC + NO 4 core	NC ① ② NO ③ ④			WLG2-LDK43
	Airtight		NO only 2 core	NO ③ ④			WLG2-55LDK13
			NC + NO 4 core	NC ① ② NO ③ ④			WLG2-55LDK43

* The standard cable length for a pre-wired connector is 0.3 m. Contact your OMRON representative for information on other cable lengths.

Note: The default setting is light-ON when not operating (NO wiring).
Turn the lamp holder by 180° to change the setting to light-ON when operating (NC wiring).
(However, Three-core and Four-core Switches cannot be switched to light-ON when operating (NC wiring).)

Contact Forms

Wiring specification
Screw terminal types
No indicator

Basic Switches

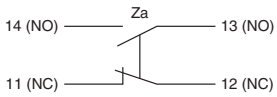

High-sensitivity/ High-precision Switches

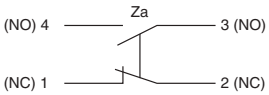

Operation indicator (Light-ON when Not Operating) Switches

Basic Switches

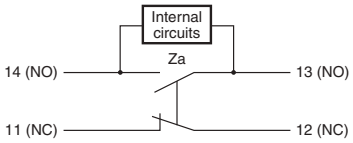

High-sensitivity/ High-precision Switches

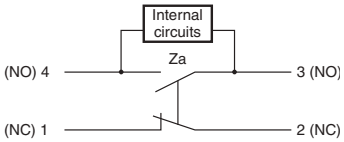

Direct-wire Connector and Pre-wired Connector types
No indicator

Basic

AC

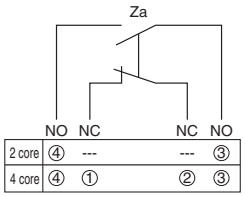

①②③④ indicate the connector pin number.

DC

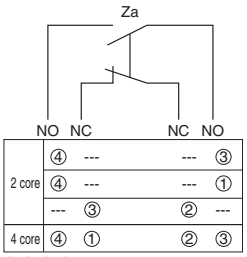

①②③④ indicate the connector pin number.

High-sensitivity/High-precision Switches

AC

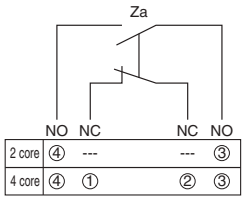

①②③④ indicate the connector pin number.

DC

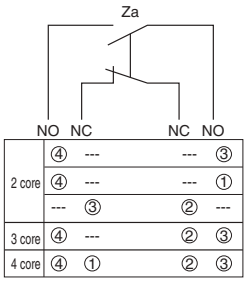

①②③④ indicate the connector pin number.

Operation indicator (Light-ON when Not Operating) Switches

Basic

AC

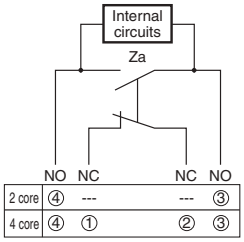

①②③④ indicate the connector pin number.

DC

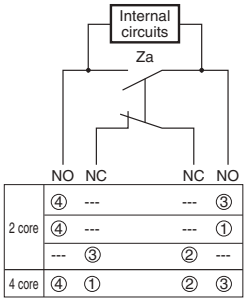

①②③④ indicate the connector pin number.

High-sensitivity/High-precision Switches

AC

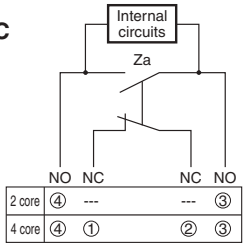

①②③④ indicate the connector pin number.

DC

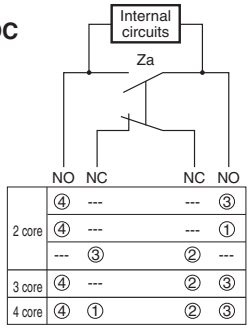

①②③④ indicate the connector pin number.

Connector Pin Layout Diagram

Basic/High-sensitivity/High-precision Switches

AC

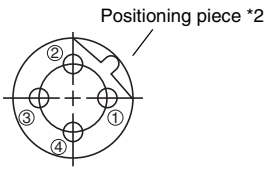

DC

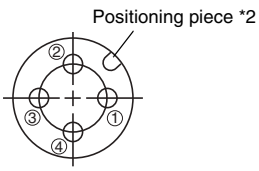

Note: Leakage current from indicator circuit may cause load malfunction (i.e., the load may remain ON). Make sure that the load operating current is higher than the leakage current. For countermeasures, refer to technical support on your OMRON website.

*1. Light-ON when not operating means the operation indicator is lit when the actuator is free and is not light when the Switch contacts (NO) close when the actuator rotates or is pushed down.

*2. The position of the positioning piece is not always the same. If using an L-shaped connector causes problems in application, use a straight connector.

Connecting Sensor I/O connector cable (Socket)

Type	AC/DC Type	Number of cable cores	Cable length L (m)	Model	Applicable limit switch models
M12 Screw (Straight) 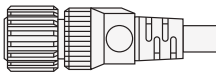	AC	2	2 m	XS2F-A421-DB0-F	WL□-□K13A-N
			5 m	XS2F-A421-GB0-F	
		4	2 m	XS2F-A421-D90-F	WL□-□K43A-N WL□-□-AGJ-N
			5 m	XS2F-A421-G90-F	
	DC	2	2 m	XS2F-D421-DD0	WL□-□K13-N WL□-□-M1J-N
			5 m	XS2F-D421-GD0	
			2 m	XS2F-D421-DA0-F	WL□-□-M1GJ□-N
			5 m	XS2F-D421-GA0-F	
		4	2 m	XS2F-D421-D80-F	WL□-□K43-N WL□-□-M1JB-N WL□-□-DGJ-N
			5 m	XS2F-D421-G80-F	
M12 Smart click type (Straight) 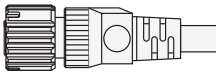	DC	4	2 m	XS5F-D421-D80-F	WL□-□-M1TJ-N WL□-□-M1TJB-N
			5 m	XS5F-D421-G80-F	

Dimensions (Unit: mm)

XS2F-□421-□□0-□
XS2F-D421-□D0

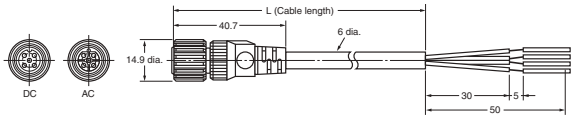

Wiring Diagram

AC/DC Type	Two-core model		Four-core model	
	Model	Wiring Diagram	Model	Wiring Diagram
AC	XS2F-A421-DB0-F XS2F-A421-GB0-F	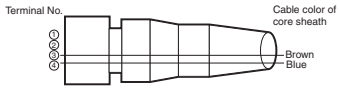	XS2F-A421-D90-F XS2F-A421-G90-F	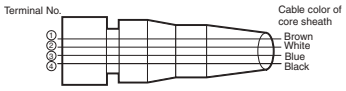
DC	XS2F-D421-DD0 XS2F-D421-GD0	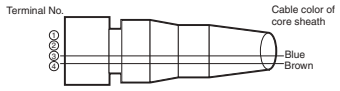	XS2F-D421-D80-F XS2F-D421-G80-F	
	XS2F-D421-DA0-F XS2F-D421-GA0-F	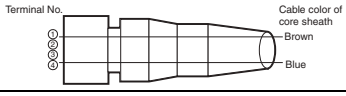		

XS5F-D421-□80-F

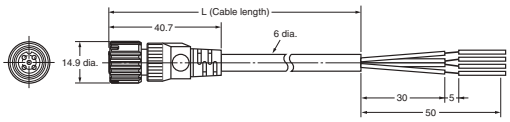

Wiring Diagram

AC/DC Type	Four-core model	
	Model	Wiring Diagram
DC	XS5F-D421-D80-F XS5F-D421-G80-F	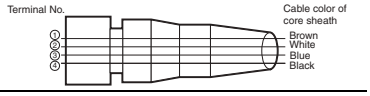

Environment-resistant Switches

Switches with Roller Lever Actuators
Basic Switches

Actuator		Roller lever: R38	Adjustable roller lever	Adjustable rod lever: 25 to 140 mm
Built-in switch specification		Model	Model	Model
Airtight seal		WLCA2-55-N	WLCA12-55-N	WLCL-55-N
		WLCA2-255-N	—	—
		WLCA2-2N55-N	—	—
Hermetic seal *	Molded terminals, -139 models	WLCA2-139-N	WLCA12-139-N	WLCL-139-N
		WLCA2-2139-N	—	—
		WLCA2-2N139-N	—	—
	Molded terminals, -140 models	WLCA2-140-N	WLCA12-140-N	WLCL-140-N
		—	—	—
		WLCA2-2N140-N	—	—
	Molded terminals, -141 models	WLCA2-141-N	WLCA12-141-N	—
		—	—	—
		—	—	—
	Anti-coolant	WLCA2-RP60-N	WLCA12-RP60-N	WLCL-RP60-N
		WLCA2-2RP60-N	—	—
		—	—	—
Heat-resistant		WLCA2-TH-N	WLCA12-TH-N	WLCL-TH-N
		WLCA2-2TH-N	WLCA12-2TH-N	WLCL-2TH-N
		WLCA2-2NTH-N	WLCA12-2NTH-N	WLCL-2NTH-N
Low-temperature		WLCA2-TC-N	WLCA12-TC-N	WLCL-TC-N
		WLCA2-2TC-N	WLCA12-2TC-N	WLCL-2TC-N
		WLCA2-2NTC-N	WLCA12-2NTC-N	WLCL-2NTC-N
Corrosion-proof		WLCA2-RP-N	WLCA12-RP-N	WLCL-RP-N
Weather-proof		WLCA2-P1-N	WLCA12-P1-N	WLCL-P1-N

* The maximum cable length for a Hermetic Switch is 5 m.

High-sensitivity Switches

Actuator		Roller lever: R38	Adjustable roller lever	Adjustable rod lever: 25 to 140 mm
Built-in switch specification		Model	Model	Model
Airtight seal		WLG2-55	—	—
Hermetic seal *	Molded terminals, -139 models	WLG2-139	—	—
	Molded terminals, -140 models	WLG2-140	—	—
	Molded terminals, -141 models	WLG2-141	—	—
	Anti-coolant	WLG2-RP60	—	—
Heat-resistant		WLG2-TH	WLG12-TH	WLGL-TH
Low-temperature		WLG2-TC	WLG12-TC	WLGL-TC
Corrosion-proof		WLG2-RP	WLG12-RP	WLGL-RP
Weather-proof		WLG2-P1	WLG12-P1	WLGL-P1

* The maximum cable length for a Hermetic Switch is 5 m.

High-precision Switches

Actuator		Roller lever: R38
Built-in switch specification		Model
Airtight seal		WLGCA2-55
Hermetic seal *	Molded terminals, -139 models	WLGCA2-139
	Molded terminals, -140 models	WLGCA2-140
	Molded terminals, -141 models	WLGCA2-141
	Anti-coolant	WLGCA2-RP60
Heat-resistant		WLGCA2-TH
Low-temperature		WLGCA2-TC
Corrosion-proof		WLGCA2-RP
Weather-proof		—

* The maximum cable length for a Hermetic Switch is 5 m.

Switches with Plunger Actuators
Basic Switches

Actuator		Sealed Top-roller plunger	Top-roller plunger	Horizontal plunger	Horizontal-roller plunger
Built-in switch specification		Model	Model	Model	Model
Airtight seal		WLD28-55-N	WLD2-55-N	WLSD-55-N	WLSD2-55-N
Hermetic seal *	Molded terminals, -139 models	WLD28-139-N	WLD2-139-N	WLSD-139-N	WLSD2-139-N
	Molded terminals, -140 models	WLD28-140-N	—	—	WLSD2-140-N
	Anti-coolant	WLD28-RP60-N	WLD2-RP60-N	WLSD-RP60-N	WLSD2-RP60-N
Heat-resistant		WLD28-TH-N	WLD2-TH-N	WLSD-TH-N	WLSD2-TH-N
Low-temperature		—	—	WLSD-TC-N	WLSD2-TC-N
Corrosion-proof		WLD28-RP-N	—	WLSD-RP-N	WLSD2-RP-N

* The maximum cable length for a Hermetic Switch is 5 m.

Switches with Flexible Rod Actuators
Basic Switches

Actuator		Coil spring (spring diameter: 6.5)	Resin rod (rod diameter: 8)
Built-in switch specification		Model	Model
Airtight seal		WLNJ-55-N	WLNJ-255-N
Hermetic seal *	Molded terminals, -139 models	WLNJ-139-N	WLNJ-2139-N
	Molded terminals, -140 models	WLNJ-140-N	WLNJ-2140-N
	Anti-coolant	WLNJ-RP60-N	WLNJ-2RP60-N
Heat-resistant		WLNJ-TH-N	—
Low-temperature		WLNJ-TC-N	—
Corrosion-proof		WLNJ-RP-N	WLNJ-2RP-N

* The maximum cable length for a Hermetic Switch is 5 m.

Environment-resistant Switches

Operation indicator Switches

Switches with Roller Lever Actuators
Basic Switches

			Actuator	Roller lever: R38	Adjustable roller lever	Adjustable rod lever: 25 to 140 mm
Built-in switch specification		Indicator *	Wiring Specifications	Model	Model	Model
Airtight seal		Neon lamp	NO wiring	WLCA2-55LE-N	WLCA12-55LE-N	—
			NO wiring	WLCA2-255LE-N	—	—
			NO wiring	WLCA2-2N55LE-N	—	—
		LED	NO wiring	WLCA2-55LD-N	WLCA12-55LD-N	WLCL-55LD-N
			NO wiring	WLCA2-255LD-N	—	—
			NO wiring	WLCA2-2N55LD-N	—	—
Hermetic seal	Molded terminals, -139 models	LED	NC wiring	WLCA2-139LD2-N	—	—
			NO wiring	WLCA2-139LD3-N	—	—
			NC wiring	WLCA2-2139LD2-N	—	—
			NO wiring	WLCA2-2139LD3-N	—	—
	Molded terminals, -140 models		NC wiring	WLCA2-141LD2-N	—	—
			NO wiring	WLCA2-141LD3-N	—	—
	Anti-coolant		NC wiring	WLCA2-RP60LD2-N	—	—
			NO wiring	WLCA2-RP60LD3-N	—	—
			NC wiring	WLCA2-2RP60LD2-N	—	—
			NO wiring	WLCA2-2RP60LD3-N	—	—

High-sensitivity Switches

			Actuator	Roller lever: R38
Built-in switch specification		Indicator *	Wiring Specifications	Model
Airtight seal		Neon lamp	NO wiring	WLG2-55LE
		LED	NO wiring	WLG2-55LD
Hermetic seal	Molded terminals, -139 models	LED	NC wiring	—
			NO wiring	WLG2-139LD3
	Molded terminals, -140 models		NC wiring	WLG2-140LD2
			NO wiring	WLG2-140LD3
	Molded terminals, -141 models		NC wiring	WLG2-141LD2
			NO wiring	WLG2-141LD3
	Anti-coolant		NC wiring	WLG2-RP60LD2
			NO wiring	WLG2-RP60LD3

High-precision Switches

			Actuator	Roller lever: R38
Built-in switch specification		Indicator *	Wiring Specifications	Model
Airtight seal		Neon lamp	NO wiring	WLGCA2-55LE
		LED	NO wiring	WLGCA2-55LD
Hermetic seal	Molded terminals, -139 models	LED	NC wiring	WLGCA2-139LD2
			NO wiring	WLGCA2-139LD3
	Molded terminals, -140 models		NC wiring	WLGCA2-140LD2
			NO wiring	WLGCA2-140LD3
	Molded terminals, -141 models		NC wiring	—
			NO wiring	WLGCA2-141LD3
	Anti-coolant		NC wiring	WLGCA2-RP60LD2
			NO wiring	WLGCA2-RP60LD3

* The default setting is light-ON when not operating (NO wiring).
Turn the lamp holder by 180° to change the setting to light-ON when operating (NC wiring).
(Note that the lamp holder cannot be replaced on hermetic models.)

Switches with Plunger Actuators
Basic Switches

		Actuator	Sealed top-roller plunger	Top-roller plunger	Horizontal plunger	Horizontal-roller plunger
Internal switch Specifications	Indicator *	Wiring Specifications	Model	Model	Model	Model
Airtight seal	Neon lamp	NO wiring	WLD28-55LE-N	WLD2-55LE-N	—	—
	LED	NO wiring	WLD28-55LD-N	WLD2-55LD-N	WLSD-55LD-N	WLSD2-55LD-N

* The default setting is light-ON when not operating (NO wiring).
Turn the lamp holder by 180° to change the setting to light-ON when operating (NC wiring).

Switches with Flexible Rod Actuators
Basic Switches

		Actuator	Coil spring (spring diameter: 6.5)	Resin rod (rod diameter: 8)
Internal switch Specifications	Indicator *	Wiring Specifications	Model	Model
Airtight seal	Neon lamp	NO wiring	—	—
	LED	NO wiring	WLNJ-55LD-N	WLNJ-255LD-N

* The default setting is light-ON when not operating (NO wiring).
Turn the lamp holder by 180° to change the setting to light-ON when operating (NC wiring).

Spatter-prevention Switches

Basic Switches

Actuator	Roller lever: R38		Sealed Top-roller plunger
	Double nut lever	Allen-head lever	
Indicator *	Model	Model	Model
Neon lamp	WLCA2-LEAS-N	WLCA2-LES-N	WLD28-LES-N
LED	WLCA2-LDAS-N	WLCA2-LDS-N	WLD28-LDS-N

High-sensitivity Switches

Actuator	Roller lever: R38	
	Double nut lever	Allen-head lever
Indicator *	Model	Model
Neon lamp	WLG2-LEAS	WLG2-LES
LED	WLG2-LDAS	WLG2-LDS

High-precision Switches

Actuator	Roller lever: R38	
	Double nut lever	Allen-head lever
Indicator *	Model	Model
Neon lamp	—	WLGCA2-LES
LED	—	WLGCA2-LDS

* The default setting is light-ON when not operating (NO wiring).
Turn the lamp holder by 180° to change the setting to light-ON when operating (NC wiring).

Long-life Switches

Basic Switches

Actuator	Indicator *1	AC/DC Type	Wiring Specifications	Connectors pin No.	Model
Roller lever Screw terminal type	LED	AC/DC	—	—	WLMCA2-LD-N
Roller lever Direct-wire Connector type		AC	2-conductor	NO ③ ④	WLMCA2-LDK13A-N
			4-conductor	NC ① ② NO ③ ④	WLMCA2-LDK43A-N
		DC	2-conductor	NO ③ ④	WLMCA2-LDK13-N
			4-conductor	NC ① ② NO ③ ④	WLMCA2-LDK43-N
Roller lever Pre-wired Connector type *2		DC	2-conductor	NO ③ ④	WLMCA2-LD-M1J-N
			4-conductor	NC ① ② NO ③ ④	WLMCA2-LD-DGJ-N

*1. The default setting is light-ON when not operating (NO wiring).
Turn the lamp holder by 180° to change the setting to light-ON when operating (NC wiring).
(However, Four-core Switches cannot be switched to light-ON when operating (NC wiring).)
*2. With 0.3-m cable.

High-sensitivity/High-precision Switches

Actuator	Indicator *1	AC/DC Type	Wiring Specifications	Connectors pin No.	High-sensitivity	High-precision Models
					Model	Model
Roller lever Screw terminal type	LED	AC/DC	—	—	WLMG2-LD	WLMGCA2-LD
Roller lever Direct-wire Connector type		AC	2-conductor	NO ③ ④	WLMG2-LDK13A	WLMGCA2-LDK13A
			4-conductor	NC ① ② NO ③ ④	WLMG2-LDK43A	WLMGCA2-LDK43A
		DC	2-conductor	NO ③ ④	WLMG2-LDK13	WLMGCA2-LDK13
			4-conductor	NC ① ② NO ③ ④	WLMG2-LDK43	WLMGCA2-LDK43
Roller lever Pre-wired Connector type *2		DC	2-conductor	NO ③ ④	WLMG2-LD-M1J	WLMGCA2-LD-M1J
			4-conductor	NC ① ② NO ③ ④	WLMG2-LD-DGJ03	—

*1. The default setting is light-ON when not operating (NO wiring).
Turn the lamp holder by 180° to change the setting to light-ON when operating (NC wiring).
(However, Four-core Switches cannot be switched to light-ON when operating (NC wiring).)
*2. With 0.3-m cable.

Individual Parts

Switches without Levers, Heads, and Actuators

General-purpose Parts

Actuator	Operating characteristics	Set	Switches without levers	Heads (with Actuators)	Actuator only *
			Model	Model	Model
Roller lever	Basic	WLCA2-N	WLRCA2-N	WL-1H1100-N	WL-1A100
		WLCA2-2-N	WLRCA2-2-N	WL-3H1100-N	
		WLCA2-2N-N	WLRCA2-2N-N	WL-1H1100-N	
	High-sensitivity	WLG2	WLRG2	WL-2H1100	
Adjustable roller lever	Basic	WLCA12-N	WLRCA2-N	WL-1H2100-N	WL-2A100
		WLCA12-2-N	WLRCA2-2-N	WL-3H2100-N	
		WLCA12-2N-N	WLRCA2-2N-N	WL-1H2100-N	
	High-sensitivity	WLG12	WLRG2	WL-2H2100	
Variable rod lever	Basic	WLCL-N	WLRCL-N	WL-4H4100-N	WL-4A100
		WLCL-2-N	WLRCA2-2-N	WL-3H4100-N	
		WLCL-2N-N	WLRCA2-2N-N	WL-1H4100-N	
	High-sensitivity	WLGL	WLRG2	WL-2H4100	
Fork lock lever	Basic	WLCA32-41-N	WLRCA32-N	WL-5H5100-N	WL-5A100
		WLCA32-42-N		WL-5H5102-N	WL-5A102
		WLCA32-43-N		WL-5H5104-N	WL-5A104
		WLCA32-44-N		WL-5H5104-N	WL-5A104
Top plunger	Basic	WLD18-N	—	WL-7H100-N	—
		WLD28-N		WL-7H400-N	—
		WLD38-N		WL-7H300-N	—
Horizontal plunger	Basic	WLSD-N	—	WL-8H100-N	—
		WLSD2-N		WL-8H200-N	—
		WLSD3-N		WL-8H300-N	—
Flexible rod	Basic	WLNJ-N	—	WL-9H100-N	—
		WLNJ-30-N		WL-9H200-N	—
		WLNJ-2-N		WL-9H300-N	—
		WLNJ-S2-N		WL-9H400-N	—

* The same Actuators can be used for both WL and WL-N Switches.

Spatter-prevention Parts

Actuator	Lever Specifications	Item	Set Model Numbers	Switches without levers	Heads (with Actuators)	Actuator only *
				Model	Model	Model
Roller lever	Allen-head bolt lever	Basic	WLCA2-LES-N	WLRCA2-LES-N	—	WL-1A103S
			WLCA2-LDS-N	WLRCA2-LDS-N		
		High-sensitivity	WLG2-LDS	WLRG2-LDS		
	Double nut lever	Basic	WLCA2-LEAS-N	WLRCA2-LES-N	—	WL-1A105S
			WLCA2-LDAS-N	WLRCA2-LDS-N		
		High-sensitivity	WLG2-LDAS	WLRG2-LDS		

* The same Actuators can be used for both WL and WL-N Switches.

Covers with Indicators (See Note.)

General-purpose/Long-life Parts

Basic Parts

	Cover	Cover only *1
Indicator *2	Color	Model
Neon lamp	Orange	WL-LE-N *3
LED	Red	WL-LD-N
	Yellow	WL-LW-N *3

High-sensitivity/High-precision Parts

	Cover	Cover only *1
Indicator *2	Color	Model
Neon lamp	Orange	WL-LE
LED	Red	WL-LD

*1. The Covers are not compatible with Basic Switches (WL-N), or High-sensitivity/High-precision Switches (WL).
*2. The default setting is light-ON when not operating (NO wiring).
Turn the lamp holder by 180° to change the setting to light-ON when operating (NC wiring).
*3. The Color Universal Design structure is certified by an NPO.
Certification conditions: Ambient illumination of 500 lx max. (JIS Z 9110)

Color Universal Design was developed in consideration of people with various types of color vision to allow information to be accurately conveyed to as many individuals as possible.

Spatter-prevention Parts

Basic Parts

	Cover	Cover only
Indicator *	Color	Model
Neon lamp	Orange	WL-LES-N
LED	Red	WL-LDS-N

* The default setting is light-ON when not operating (NO wiring).
Turn the lamp holder by 180° to change the setting to light-ON when operating (NC wiring).

Specifications

General-purpose/Environment-resistant Switches

Ratings

Wiring Specifications

Screw terminal types

Standard-load Switches (excluding micro-load Switches)

Item	Rated voltage (V)	Non-inductive load (A)				Inductive load (A)			
		Resistive load		Lamp load		Inductive load		Motor load	
		NC	NO	NC	NO	NC	NO	NC	NO
Basic	AC 125	10		3	1.5	10		5	2.5
	250	10		2	1	10		3	1.5
	500	10		1.5	0.8	3		1.5	0.8
	DC 8	10		6	3	10		6	
	14	10		6	3	10		6	
	30	6		4	3	6		4	
	125	0.8		0.2	0.2	0.8		0.2	
	250	0.4		0.1	0.1	0.4		0.1	
High-sensitivity High-precision *1	AC 125	5		—		—		—	
	250	5							
	DC 125	0.4		—		—		—	
	250	0.2							

Note: 1. The above figures are for steady-state currents.
2. Inductive loads have a power factor of 0.4 min. (AC) and a time constant of 7 ms max. (DC).
3. A lamp load has an inrush current of 10 times the steady-state current.
4. A motor load has an inrush current of 6 times the steady-state current.

Inrush current	NC	30 A max. (15 A max. *1)
	NO	20 A max. (10 A max. *1)

*1. For High-sensitivity and High-precision Switches.

Operating characteristics	Minimum applicable load
Basic	5 VDC 1 mA, resistive load, P level
High-sensitivity, High-precision	5 VDC 160 mA, resistive load, N level reference value

Direct-wired connector and Pre-wired Connector type

Item	Rated voltage (V)	Non-inductive load (A)				Inductive load (A)			
		Resistive load		Lamp load		Inductive load		Motor load	
		NC	NO	NC	NO	NC	NO	NC	NO
Basic	AC 115	3		3	1.5	3		3	2.5
	DC 12	3		3		3		3	
	24	3		3		3		3	
	115	0.8		0.2		0.8		0.2	
High-sensitivity High-precision *1	AC 115	3		—		—		—	
	DC 115	0.4		—		—		—	

Note: 1. The above figures are for steady-state currents.
2. Inductive loads have a power factor of 0.4 min. (AC) and a time constant of 7 ms max. (DC).
3. A lamp load has an inrush current of 10 times the steady-state current.
4. A motor load has an inrush current of 6 times the steady-state current.

Inrush current	NC	3 A max.
	NO	3 A max.

Operating characteristics	Minimum applicable load
Basic	5 VDC 1 mA, resistive load, P level
High-sensitivity, High-precision	5 VDC 160 mA, RESISTIVE Load, N level reference value

Micro-load Switches (Refer to these ratings before using the product.)

Rated voltage (V)	Rated current (A) - Resistive load
AC125	0.1
DC 30	

Note: The load is a resistive load.

Operation in the following ranges will produce optimum performance.

Recommended load range	5 to 30 VDC 0.16 to 100 mA

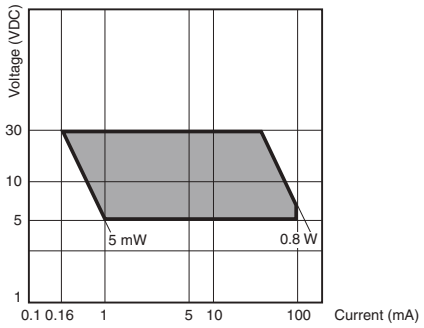

Operating characteristics	Minimum applicable load
High-sensitivity, High-precision	5 VDC 1 mA N level reference value

Operation indicator Switches

Operation Indicator

Model		Max. rated voltage (V)	Leakage current (mA)
WL-LE-N WL-LE	Neon lamp	125 VAC	Approx. 0.6
		250 AC	Approx. 1.9
WL-LD-N WL-LW-N WL-LD	LED	10 to 24 VAC/DC	Approx. 0.4
		115 VAC/DC	Approx. 0.5

Characteristics

Degree of protection		IP67
Durability *1	**Mechanical**	15,000,000 operations min. *2
	Electrical	750,000 operations min. (3 A at 250 VAC, resistive load) *3
Operating speed		1 mm to 1 m/s (for WLCA2-N)
Operating frequency	**Mechanical**	120 operations/minute min.
	Electrical	30 operations/minute min.
Rated frequency		50/60 Hz
Insulation resistance		100 MΩ min. (at 500 VDC)
Contact resistance		25 mΩ max. (initial value for the built-in switch when tested alone)
Dielectric strength	**Between terminals of the same polarity**	1,000 VAC (600 VAC) 50/60 Hz 1 min
	Between currentcarrying metal part and ground	2,200 VAC (1,500 VAC) 50/60 Hz 1 min *5
	Between each terminal and non-current-carrying metal part	2,200 VAC (1,500 VAC) 50/60 Hz 1 min *5
Vibration resistance	**Malfunction**	10 to 55 hz, 1.5-mm double amplitude *6
Shock resistance	**Destruction**	1,000 m/s² max.
	Malfunction	300 m/s² *6
Ambient operating temperature		-10 to +80°C (with no icing) *7
Ambient operating humidity		35% to 95% RH
Weight		Approx. 255 g (for WLCA2-N)

Note: 1. The above figures are initial values.
2. The figures in parentheses for dielectric strength are those for the high-sensitivity and high-precision switches models.

*1. The values are calculated at an operating temperature of +5°C to +35°C, and an operating humidity of 40% to 70% RH.
Contact your OMRON sales representative for more detailed information on other operating environments.

*2. High-sensitivity models and Flexible Rod models: 10 million operations min.
500,000 operations min. for Weather-resistant models.

*3. High-sensitivity models, High-precision models, and Weather-proof models are 500,000 operations min.
Micro-load models are 1 million operations min.
Contact your OMRON representative for information on Airtight models and Hermetic models.

*4. Micro-load models and Weather-proof models are 50 mΩ or less (default value, built-in switch only).

*5. Sensor I/O connector type is 1,500 V.

*6. Except Flexible Rod models. Micro-load models are 200 m/s² max.

*7. For low-temperature models this is –40°C to +40°C (with no icing).
For heat-resistant models the range is +5°C to +120°C.

Spatter-prevention Switches

Ratings

Wiring Specifications

Screw terminal types

Item	Rated voltage (V)	Non-inductive load (A)				Inductive load (A)			
		Resistive load		Lamp load		Inductive load		Motor load	
		NC	NO	NC	NO	NC	NO	NC	NO
WL□-LES-N	AC 125	10 (5)		3	1.5	10		5	2.5
	250	10 (5)		2	1	10		3	1.5
WL□-LDS-N	AC 115	10 (5)		3	1.5	10		5	2.5
	DC 12	10		6	3	10		6	
	24	6		4	3	6		4	
	115	0.8 (0.4)		0.2	0.2	0.8		0.2	

Note: 1. The above figures are for steady-state currents.
2. Inductive loads have a power factor of 0.4 min. (AC) and a time constant of 7 ms max. (DC).
3. A lamp load has an inrush current of 10 times the steady-state current.
4. A motor load has an inrush current of 6 times the steady-state current.
5. The figures in parentheses for resistive load are those for the high-sensitivity and high-precision switches models.

Inrush current	**NC**	30 A max. (15 A max. *)
	NO	20 A max. (10 A max. *)

* For High-sensitivity and High-precision Switches.

Operating characteristics	Minimum applicable load
Basic	5 VDC 1 mA, resistive load, P level
High-sensitivity, High-precision	5 VDC 160 mA, Resistive load, N level reference value

Direct-wired connector and Pre-wired Connector type

Item	Rated voltage (V)	Non-inductive load (A)				Inductive load (A)			
		Resistive load		Lamp load		Inductive load		Motor load	
		NC	NO	NC	NO	NC	NO	NC	NO
Basic	AC 115	3		3	1.5	3		3	2.5
	DC 12	3		3		3		3	
	24	3		3		3		3	
	115	0.8		0.2		0.8		0.2	
High-sensitivity High-precision *1	AC 115	3		—		—		—	
	DC 115	0.4		—		—		—	

Note: 1. The above figures are for steady-state currents.
2. Inductive loads have a power factor of 0.4 min. (AC) and a time constant of 7 ms max. (DC).
3. A lamp load has an inrush current of 10 times the steady-state current.
4. A motor load has an inrush current of 6 times the steady-state current.

Inrush current	**NC**	3 A max.
	NO	3 A max.

Operating characteristics	Minimum applicable load
Basic	5 VDC 1 mA, resistive load, P level
High-sensitivity, High-precision	5 VDC 160 mA, Resistive load, N level reference value

Operation indicator Switches

Operation Indicator

Model		Max. rated voltage (V)	Leakage current (mA)
WL-LES-N WL-LE	Neon lamp	125 VAC	Approx. 0.6
		250 VAC	Approx. 1.9
WL-LDS-N WL-LD	LED	10 to 24 VAC/DC	Approx. 0.4
		115 VAC/DC	Approx. 0.5

Characteristics

Degree of protection		IP67
Durability *1	**Mechanical**	15,000,000 operations min. *2
	Electrical	750,000 operations min. (3 A at 250 VAC, resistive load) *3
Operating speed		1 mm to 1 m/s (in case of WLCA2-LDS-N)
Operating frequency	**Mechanical**	120 operations/minute min.
	Electrical	30 operations/minute min.
Rated frequency		50/60Hz
Insulation resistance		100 MΩ min. (at 500 VDC)
Contact resistance		25 mΩ max. (initial value for the built-in switch)
Dielectric strength	**Between terminals of the same polarity**	1,000 VAC (600 VAC) 50/60 Hz 1 min
	Between currentcarrying metal part and ground	2,200 VAC (1,500 VAC) 50/60 Hz 1 min *4
	Between each terminal and non-current-carrying metal part	2,200 VAC (1,500 VAC) 50/60 Hz 1 min *4
Vibration resistance	**Malfunction**	10 to 55 hz, 1.5-mm double amplitude
Shock resistance	**Destruction**	1,000 m/s² max.
	Malfunction	300 m/s² max.
Ambient operating temperature		-10 to +80°C (with no icing)
Ambient operating humidity		35% to 95% RH
Weight		Approx. 255 g (in case of WLCA2-LDS-N)

Note: 1. The above figures are initial values.
2. The figures in parentheses for dielectric strength are those for the high-sensitivity and high-precision switches models.

*1. The values are calculated at an operating temperature of +5°C to +35°C, and an operating humidity of 40% to 70%RH.
Contact your OMRON sales representative for more detailed information on other operating environments.
*2. High-sensitivity models are 10 million operations min.
*3. High-sensitivity models and High-precision models are 500,000 operations min.
Micro-load models are 10 million operations min.
Contact your OMRON representative for information on Airtight switches.
*4. Sensor I/O connector type is 1,500 V.

Long-life Switches

Ratings

Wiring Specifications

Screw terminal type

Item	Rated voltage (V)	Non-inductive load (A)				Inductive load (A)			
		Resistive load		Lamp load		Inductive load		Motor load	
		NC	NO	NC	NO	NC	NO	NC	NO
Basic	AC 115	10		3	1.5	10		5	2.5
	DC 12	10		6	3	10		6	
	24	6		4	3	6		4	
	115	0.8		0.2	0.2	0.8		0.2	
High-sensitivity High-precision *	AC 115	5		—		—		—	
	DC 115	0.4		—		—		—	

Note: 1. The above figures are for steady-state currents.
2. Inductive loads have a power factor of 0.4 min. (AC) and a time constant of 7 ms max. (DC).
3. A lamp load has an inrush current of 10 times the steady-state current.
A motor load has an inrush current of 6 times the steady-state current.

Inrush current	NC	30 A max. (15 A max. *)
	NO	20 A max. (10 A max. *)

* For High-sensitivity and High-precision Switches.

Operating characteristics	Minimum applicable load
Basic	5 VDC 1 mA, resistive load, P level
High-sensitivity, High-precision	5 VDC 160 mA, Resistive load, N level reference value

Direct-wired connector and Pre-wired Connector type

Item	Rated voltage (V)	Non-inductive load (A)				Inductive load (A)			
		Resistive load		Lamp load		Inductive load		Motor load	
		NC	NO	NC	NO	NC	NO	NC	NO
Basic	AC 115	3		3	1.5	3		3	2.5
	DC 12	3		3		3		3	
	24	3		3		3		3	
	115	0.8		0.2		0.8		0.2	
High-sensitivity High-precision *1	AC 115	3		—		—		—	
	DC 115	0.4		—		—		—	

Note: 1. The above figures are for steady-state currents.
2. Inductive loads have a power factor of 0.4 min. (AC) and a time constant of 7 ms max. (DC).
3. A lamp load has an inrush current of 10 times the steady-state current.
4. A motor load has an inrush current of 6 times the steady-state current.

Inrush current	NC	3 A max.
	NO	3 A max.

Operating characteristics	Minimum applicable load
Basic	5 VDC 1 mA, resistive load, P level
High-sensitivity, High-precision	5 VDC 160 mA, Resistive load, N level reference value

Operation indicator Switches

Operation Indicator

Model		Max. rated voltage (V)	Leakage current (mA)
WL-LD-N WL-LW-N WL-LD	LED	10 to 24 VAC/DC	Approx. 0.4
		115 VAC/DC	Approx. 0.5

Characteristics

Degree of protection		IP67
Durability *1	Mechanical	30,000,000 operations min.
	Electrical	30,000,000 operations min. (10 mA at 24 VDC, resistive load) 750,000 operations min. (3 A at 115 VAC, resistive load), but for high-precision models: High-sensitivity and High-precision Switches: 500,000 operations min.
Operating speed		1 mm to 1 m/s (in case of WLMCA2-LD-N)
Operating frequency	Mechanical	120 operations/min.
	Electrical	30 operations/min.
Rated frequency		50/60 Hz
Insulation resistance		100 MΩ min. (at 500 VDC)
Contact resistance		25 mΩ max. (initial value for the built-in switch when tested alone) *2
Dielectric strength (50/60 Hz 1 min.)	Between terminals of the same polarity	1,000 VAC (600 VAC), 50/60 Hz 1 min
	Between currentcarrying metal part and ground	2,200 VAC (1,500 VAC) 50/60 Hz 1 min *3
	Between each terminal and non-current-carrying metal part	2,200 VAC (1,500 VAC) 50/60 Hz 1 min *3
Vibration resistance	Malfunction	10 to 55 Hz, 1.5-mm double amplitude
Shock resistance	Destruction	1,000 m/s² max.
	Malfunction	300 m/s² max. *4
Ambient operating temperature		-10 to +80°C (with no icing)
Ambient operating humidity		35% to 95% RH
Weight		Approx. 255 g (in case of WLMCA2-LD-N)

Note: 1. The above figures are initial values.
2. The figures in parentheses for dielectric strength are those for the high-sensitivity and high-precision switches models.

*1. The values are calculated at an operating temperature of +5°C to +35°C, and an operating humidity of 40% to 70%RH.
Contact your OMRON sales representative for more detailed information on other operating environments.
*2. For microload models, the contact resistance is 50 mΩ max. (initial value for built-in switch).
*3. Sensor I/O connector models are 1,500 V.
*4. Micro-load models are 200 m/s² max.

General-purpose/Environment-resistant/Spatter-prevention/Long-life Switches

Approved Standards

Agency	Standard	File No.	Approved models
UL	UL508	Contact your OMRON representative for information	Contact your OMRON representative for information
CSA cUL	CSA C22.2 No.14		
TÜV Rheinland	EN60947-5-1		
CCC (CQC)	GB14048.5		

Approved Standard Ratings

UL/cUL, CSA (UL508, CSA C22.2 No.14)

Specifications			Approved Standards
Indicator	Sensor I/O connectors	Item	
No indicator	No Connector	Basic Switches	A600 1 A, 125 VDC
		High-sensitivity or high-precision	A600
	Pre-wired Connector (AC)	Basic, high-sensitivity or high-precision	C300 3 A, 250 VAC
	Pre-wired Connector (DC) Direct-wired Connector (DC)	Basic Switches	1 A, 125 VDC
		High-sensitivity or high-precision	0.8 A, 125 VDC
Neon lamp	No Connector	Basic Switches	A300 10 A, 250 VAC
		High-sensitivity or high-precision	
	Pre-wired Connector (AC)	Basic, high-sensitivity or high-precision	C300 3 A, 250 VAC
LED	No Connector	Basic Switches	A150 10 A, 115 VAC 1 A, 115 VDC
		High-sensitivity or high-precision	A150 10 A, 115 VAC 0.8 A, 115 VDC
	Pre-wired Connector (AC)	Basic, high-sensitivity or high-precision	C150 3 A, 115 VAC
	Pre-wired Connector (DC) Direct-wired Connector (DC)	Basic Switches	1 A, 115 VDC
		High-sensitivity or high-precision	0.8 A, 115 VDC

A600 Authentication conditions

Rated voltage	Energizing current	Current (A)		Volt-ampere (VA)	
		Make	Break	Make	Break
120 VAC 240 VAC 480 VAC 600 VAC	10 A	60 30 15 12	6 3 1.5 1.2	7,200	720

C300 Authentication conditions

Rated voltage	Energizing current	Current (A)		Volt-ampere (VA)	
		Make	Break	Make	Break
120 VAC 240 VAC	2.5 A	15 7.5	1.5 0.75	1,800	180

A300 Authentication conditions

Rated voltage	Energizing current	Current (A)		Volt-ampere (VA)	
		Make	Break	Make	Break
120 VAC 240 VAC	10 A	60 30	6 3	7,200	720

A150 Authentication conditions

Rated voltage	Energizing current	Current (A)		Volt-ampere (VA)	
		Make	Break	Make	Break
120 VAC	10 A	60	6	7,200	720

C150 Authentication conditions

Rated voltage	Energizing current	Current (A)		Volt-ampere (VA)	
		Make	Break	Make	Break
120 VAC	2.5 A	15	1.5	1,800	180

TÜV (EN 60947-5-1)

(Certification Only for Switches with Ground Terminals and DC Switches with Connectors)

Authentication conditions	Specification					
	With ground terminals					With DC Connector
	No indicator		Neon lamp	LED		
Working load category	AC-15	DC-12	AC-15	AC-15	DC-12	DC-12
Rated working voltage (Ue)	250 V	48 V	250 V	115 V	48 V	48 V
Rated working current (Ie)	2 A					
Conditional short-circuit current	100 A					
Short-circuit protective device (SCPD)	10 A, fuse type gG					
Rated insulation voltage (Ui)	250 V					48 V
Rated impulse dielectric strength (Uimp)	4 kV					800 V
Pollution degree	3					
Electric shock protection class	Class I					Class III

CCC (GB14048.5)

Authentication conditions	Specification						
	No indicator		Neon lamp	LED		With DC Connector	With AC Connector
Working load category	AC-15	DC-13	AC-15	AC-15	DC-13	DC-13	AC-15
Rated working voltage (Ue)	250 V	48 V	250 V	250 V	48 V	48 V	250 V
Rated working current (Ie)	2 A						
Conditional short-circuit current	1000 A						
Short-circuit protective device (SCPD)	10 A, fuse type gG						
Rated insulation voltage (Ui)	250 V						

Structure and Nomenclature

General-purpose Switches: WLCA2-N | **Standard Switches** | **Basic Switches**

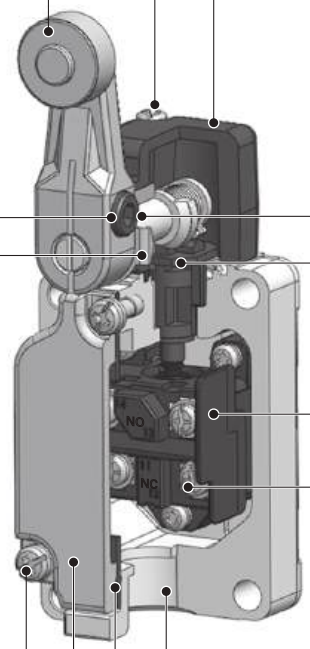

Actuator

Roller
The roller is made of self-lubricating sintered stainless steel and boasts high resistance to wear.

Lever
The lever is forged from corrosion-resistant aluminum alloy. It provides superior corrosion resistance and outstanding strength.
With roller lever, adjustable rod and flexible rod models, the actuator position can be set anywhere within 360°. (The lever cannot be mounted in the opposite direction.)

Roller Lever Bolt

Set Position Marker Plate
Set the indicator needle so that it is between protrusions on the bearing section on the marker plate after operation.

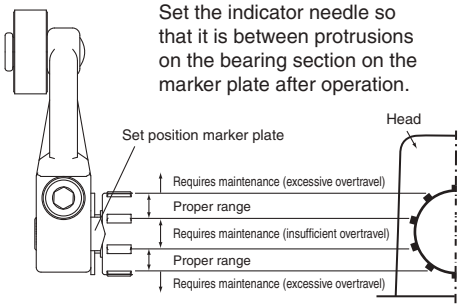

Cover Setscrew
A combination Philips-slotted screw is used.
A retainer prevents the screw from falling from the cover even when the screw is loose.

Cover

Cover Seal
High sealing performance is achieved. The seal also serves as a spacer.
There is no troublesome insulating paper, making it easy to work with the Switch.

Head-mounting Screws

Head
You can remove the two screws to mount the switch in any of the four possible orientations.

Shaft Section Seal
An oil seal is fitted on the inlet of the shaft section to maintain a tight seal.

Operational Plunger
You can change the direction of the operational plunger to electrically switch the direction of operation between both sides, left only, or right only.

Built-in Switch
Built-in switch with SPST-NO+NC contact form.

Terminal Screws
Four, M3.5 screws

Conduit Opening
The conduit screw is a parallel screw for G1/2 piping, and is used together with an SC connector to maintain a tight seal.

General-purpose Switches: WLG2

Standard Switches

High-sensitivity and High-precision Switches

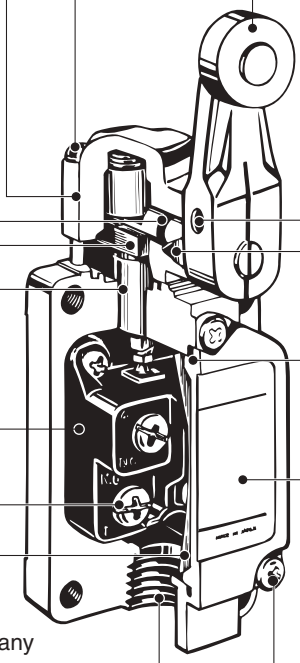

Head-mounting Screws

Head
By removing the four corner screws, the head can be mounted in any of four orientations.

Shaft Section Seal
By fitting an O-ring to the rotary shaft and with an appropriate interference of the screws, high-sealing properties are maintained.

Operational Plunger

Bearing
The bearing smooths the plunger movement.

Built-in Switch
Built-in switch with SPST-NO+NC contact form.

Terminal Screws
Four, M4 screws

Separator
The separator has outstanding insulation properties and prevents the generation of any gases which may corrode the internal parts.

Conduit Opening
The conduit screw is a parallel screw for G1/2 piping, and is used together with an SC connector to maintain a tight seal.

Actuator

Roller
The roller is made of self-lubricating sintered stainless steel and boasts high resistance to wear.

Lever
The lever forged of anti-corrosive aluminium alloy features high corrosion resistances and outstanding ruggedness. With roller lever, adjustable rod and flexible rod models, the actuator position can be set anywhere within 360°. (The lever cannot be mounted in the opposite direction.)

Roller Lever Setscrew

Set Position Marker Plate
After operation, set the indicator needle on the marker plate so that is in the convex section of the bearing.

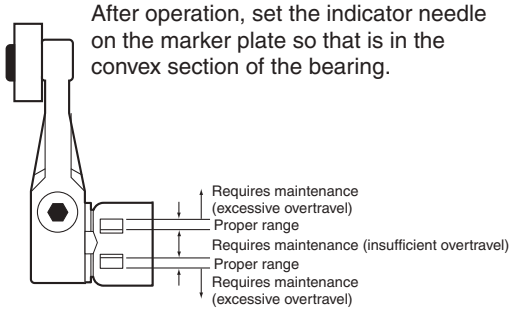

Cover Seal
By using a packing seal as the cover seal, an optimum squeeze can be obtained and high sealing properties are assured as well.

Cover

Cover Setscrew
A combination Philips-slotted screw is used. A retainer prevents the screw from falling from the cover even when the screw is loose.

Operation indicator Switches

Basic Switches

Indicator Covers

The indicator covered if outsert molded from diecast aluminum and has outstanding sealing properties.

Indicator Windows

Operating status (i.e., light-ON when operating or light-ON when not operating) depends on whether a neon lamp or an LED is used.

Light-ON when Operating/Not Operating

Indicators can be switched from light-ON when operating and light-ON when not operating, by simply rotating the indicator holder by 180°.
(However, Direct-wired Connector, Pre-wired Connector, Three-core, and Four-core Switches cannot be switched to light-ON when operating (NC wiring).)

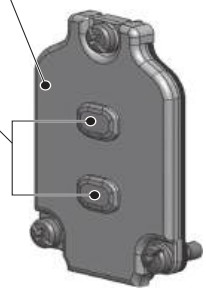

Lamp Holder

Indicator

The indicator is either a neon lamp or an LED. Switches with LED indicators have a built-in rectifier stack, so there is no connection polarity.

Contact Spring

The built-in switch's terminal screws are used to connect the indicator terminal. Since the connection spring (coil spring) is used for this connection, it will not be necessary to connect the indicator terminal. When a ground terminal is provided however, a lead wire must be used.

Light-ON when Operating

Light-ON when Not Operating

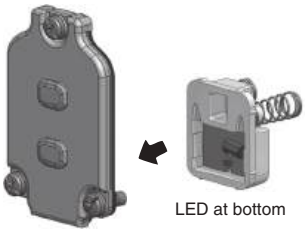

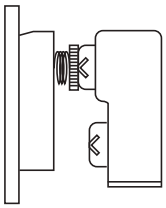

Light-ON when Not Operating

Operation

WL□-LE-N WL□-LD-N WL□-LW-N	Light-ON when operating *1	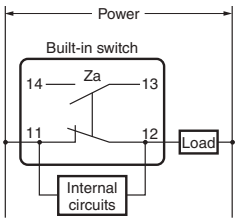
	Light-ON when not operating *2	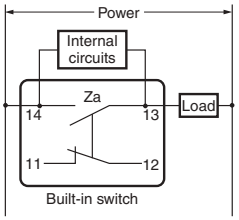

Internal Circuits

WL□-LE-N	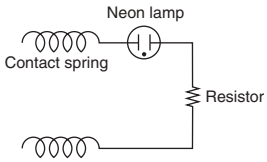
WL□-LD-N WL□-LW-N	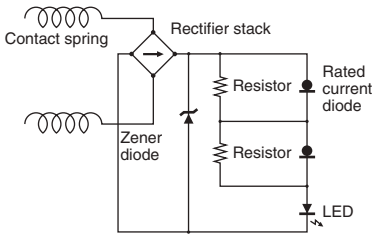

Note: Leakage current from indicator circuit may cause load malfunction (i.e., the load may remain ON). Make sure that the load operating current is higher than the leakage current.
For countermeasures, refer to technical support on your OMRON website.

*1. Light-ON when operating means that the lamp lights when the Limit Switch contacts (NC) release, or when the actuator rotates or is pushed down.

*2. Light-ON when not operating means the lamp remains lit when the actuator is free, or when the Limit Switch contacts (NO) close when the actuator rotates or is pushed down.

Operation indicator Switches

High-sensitivity and High-precision Switches

Indicator Covers

The indicator covered if outsert molded from diecast aluminum and has outstanding sealing properties.

Indicator Windows

Operation (i.e., light-ON when operating or light-ON when not operating) depends on whether a neon lamp or LED is used.

Light-ON when Operating/Not Operating

Indicators can be switched from light-ON when operating and light-ON when not operating, by simply rotating the indicator holder by 180°. (However, Direct-wired Connector, Pre-wired Connector, Three-core, and Four-core Switches cannot be switched to light-ON when operating (NC wiring).)

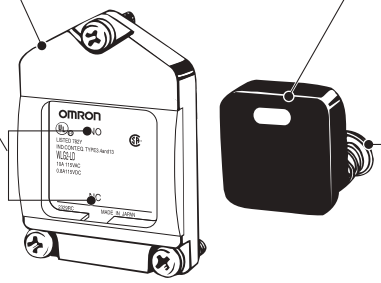

Indicator

The indicator is either a neon lamp or an LED. Switches with LED indicators have a built-in rectifier stack, so there is no connection polarity.

Contact Spring

The built-in switch's terminal screws are used to connect the indicator terminal. Since the connection spring (coil spring) is used for this connection, it will not be necessary to connect the indicator terminal. When a ground terminal is provided however, a lead wire must be used.

Light-ON when Operating

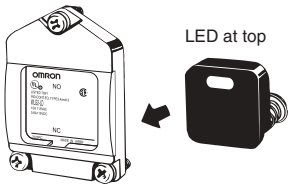

Light-ON when Not Operating

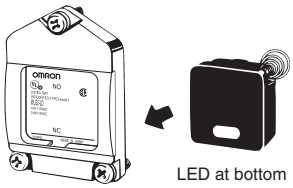

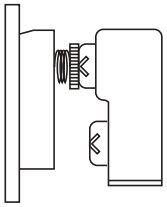

Operation

WLG□-LE WLG□-LD	**Light-ON when operating *1**	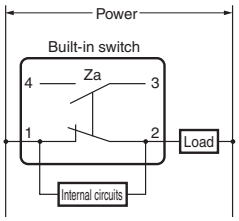
	Light-ON when not operating *2	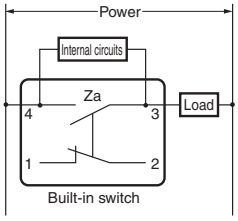

Internal Circuits

WLG□-LE	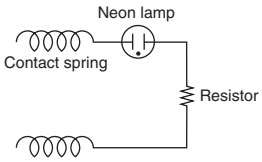
WLG□-LD	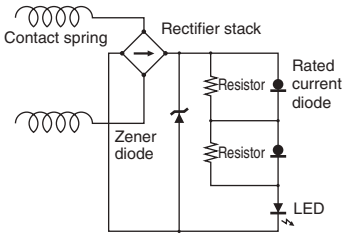

Note: Leakage current from indicator circuit may cause load malfunction (i.e., the load may remain ON). Make sure that the load operating current is higher than the leakage current.
For countermeasures, refer to technical support on your OMRON website.

*1. Light-ON when operating means that the lamp lights when the Limit Switch contacts (NC) release, or when the actuator rotates or is pushed down.

*2. Light-ON when not operating means the lamp remains lit when the actuator is free, or when the Limit Switch contacts (NO) close when the actuator rotates or is pushed down.

Environment-resistant Switches **Basic Switches**

Molding Specifications for Hermetic Switches **: Molded parts**

WL□-139-N

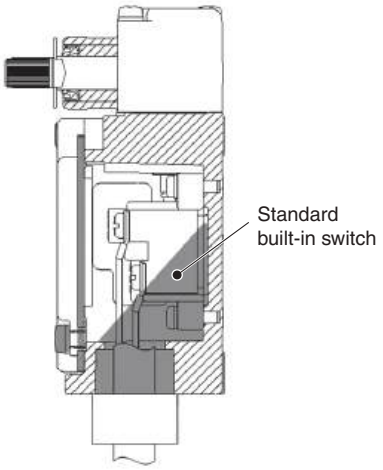

WL□-140-N

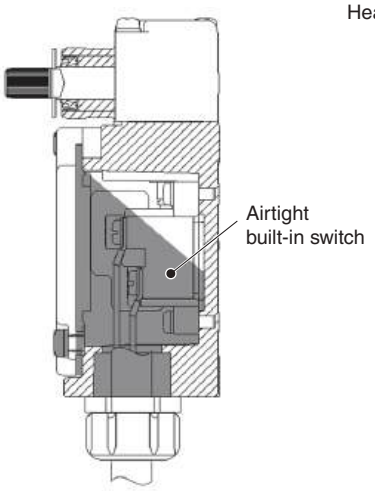

WL□-141-N

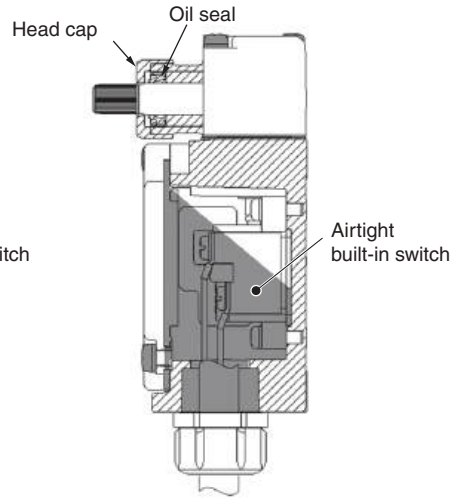

WL□-145-N

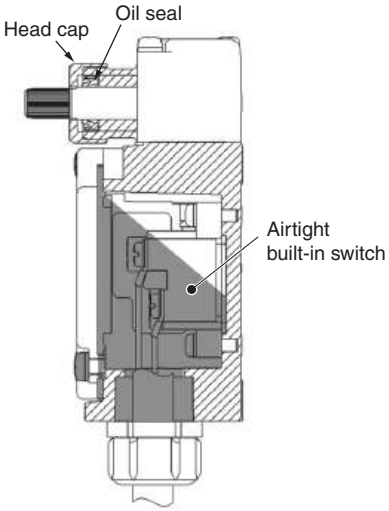

WL□-RP40-N

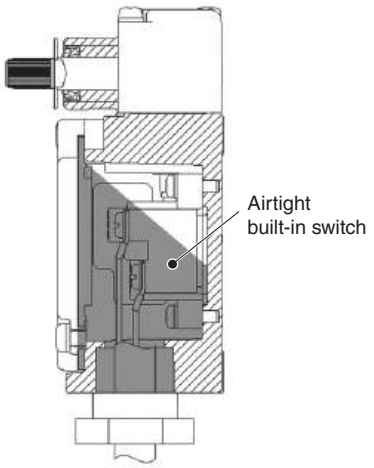

WL□-RP60-N *1

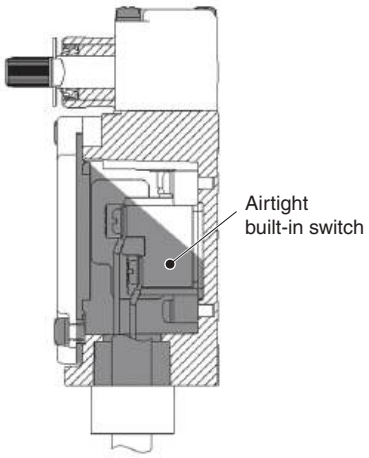

*1. Fluorine rubber is used for all rubber parts.

Model	Cable specifications	Connector specifications
WL□-139-N	Standard 5-m VCT cable. Finished outer diameter: 11.5 mm, 4 conductors.	Resin cap
WL□-140-N WL□-141-N WL□-145-N	Standard 5-m VCT cable, with high flexibility and good anti-oil properties attached. Finished outer diameter: 11.5 mm, 4 conductors.	Metal connector
WL□-RP40-N		Resin connector *2
WL□-RP60-N		Resin cap

*2. The connector can be removed, so it is possible to use flexible conduit for the cable.

Environment-resistant Switches

High-sensitivity and High-precision Switches

Mold Specifications for Hermetic Seal Switches

: Molded parts

WLG□-139

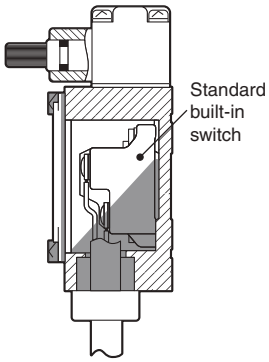

WLG□-140

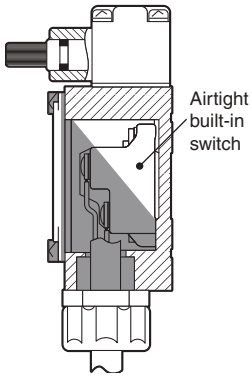

WLG□-141

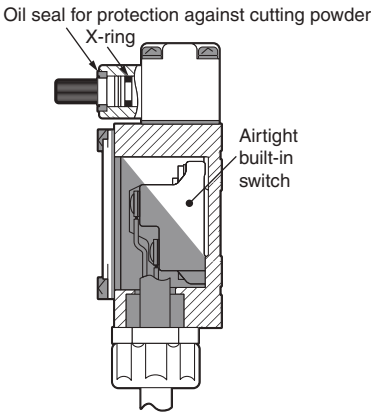

WLG□-145

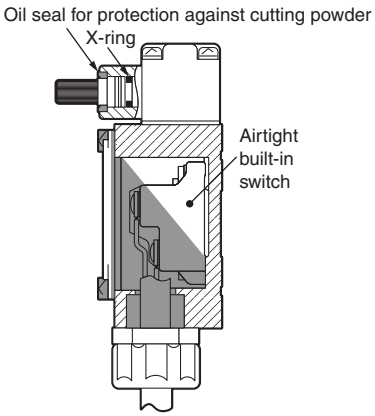

WLG□-RP40

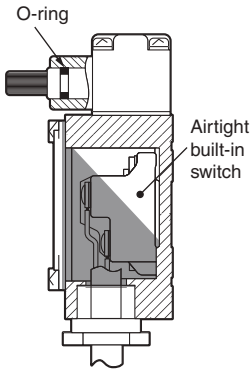

WLG□-RP60 *1

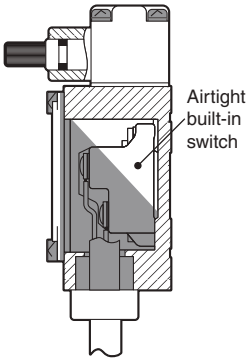

*1. Fluorine rubber is used for all rubber parts.

Model	Cable specifications	Connector specifications
WLG□-139	Standard 5-m VCT cable. Finished outer diameter: 11.5 mm, 4 conductors.	Resin cap
WLG□-140 WLG□-141 WLG□-145	Standard 5-m VCT cable, with high flexibility and good anti-oil properties attached. Finished outer diameter: 11.5 mm, 4 conductors.	Metal connector
WLG□-RP40		Resin connector *2
WLG□-RP60		Resin cap

*2. The connector can be removed, so it is possible to use flexible conduit for the cable.

Spatter-prevention Switches: WLCA2-LES-N

Basic Switches

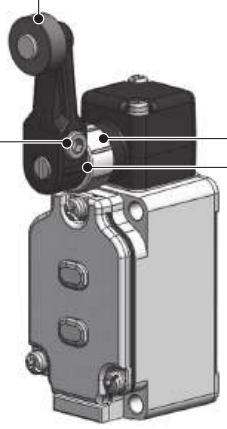

Actuator

Roller, Roller Axis
Using stainless steel prevents spatter from adhering.

Operating Lever
A baking finish is applied to the surface so that any adhering spatter is easily removed.

Roller Lever Bolt
Stainless steel construction to prevent spatter adherence.
Double nut models are also available.

Screws
Externally visible screws on the head and cover are made of stainless steel to prevent spatter adherence.

Head Cap
Using fluororesin prevents spatter from adhering.
* Spatter means the zinc powder produced when welding.
Adhering spatter to the Limit Switch may cause malfunction of lever or lamp cover.

The lack of gap prevents spatter powder from clogging.

Spatter-prevention Switches: WLG2-LEAS

High-sensitivity and High-precision Switches

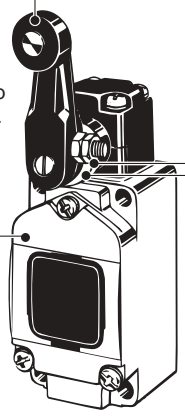

Actuator

Roller, Roller Axis
Using stainless steel prevents spatter from adhering.

Operating Lever
A baking finish is applied to the surface so that any adhering spatter is easily removed.

Double Nut
SUS is used for double nut.

Lamp Cover
· Heat-resistant resin is used for the lamp cover.
· By using spherical surface for the display part, it disperses the direction of spatter.

Screws
Externally visible screws on the head and cover are made of stainless steel to prevent spatter adherence.

Head Cap
Using fluororesin prevents spatter from adhering.
* Spatter means the zinc powder produced when welding.
Adhering spatter to the Limit Switch may cause malfunction of lever or lamp cover.

The lack of gap prevents spatter powder from clogging.

Long-life Switches: WLMCA2-N

Basic Switches

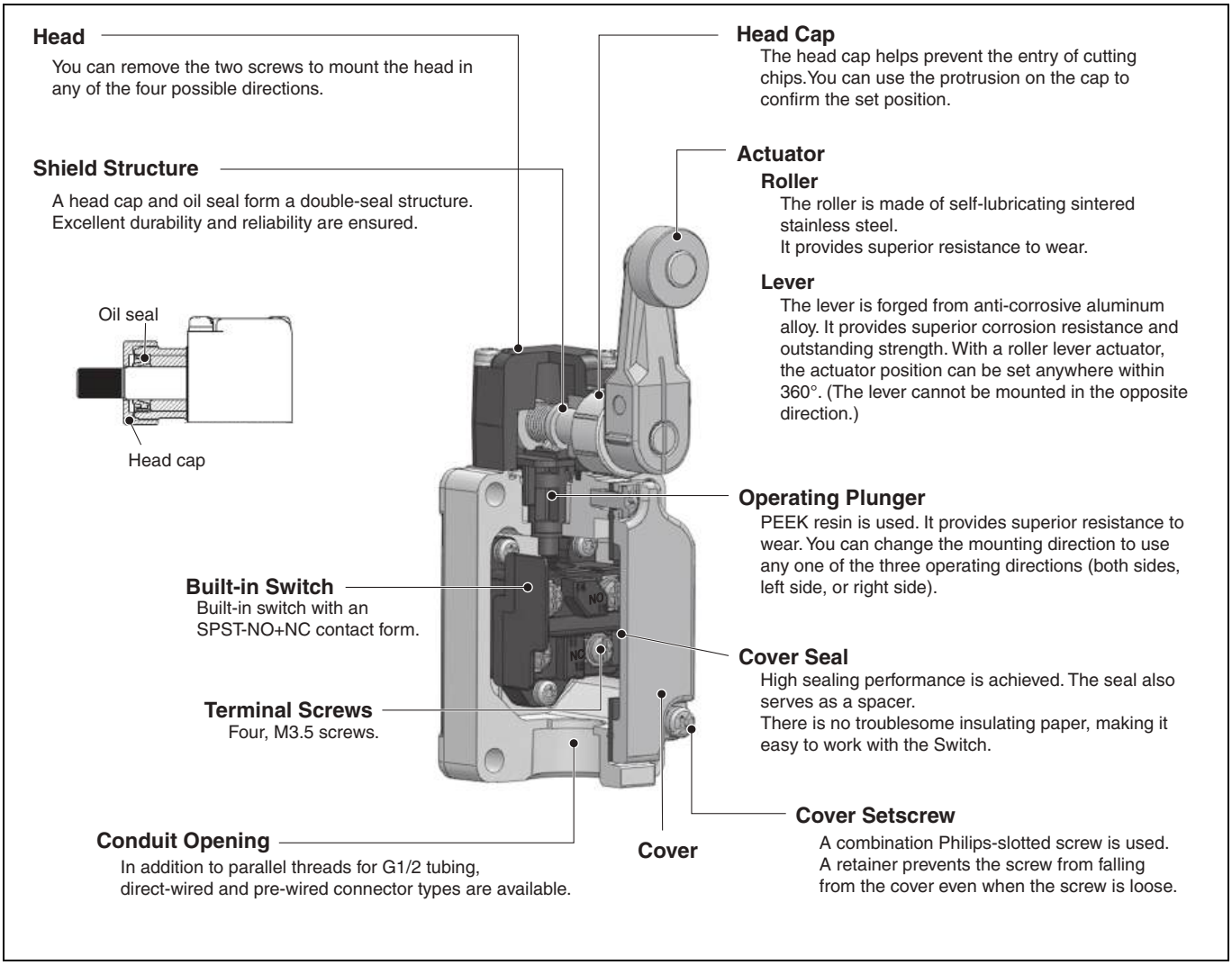

Long-life Switches: WLMG2

High-sensitivity/High-precision Switches

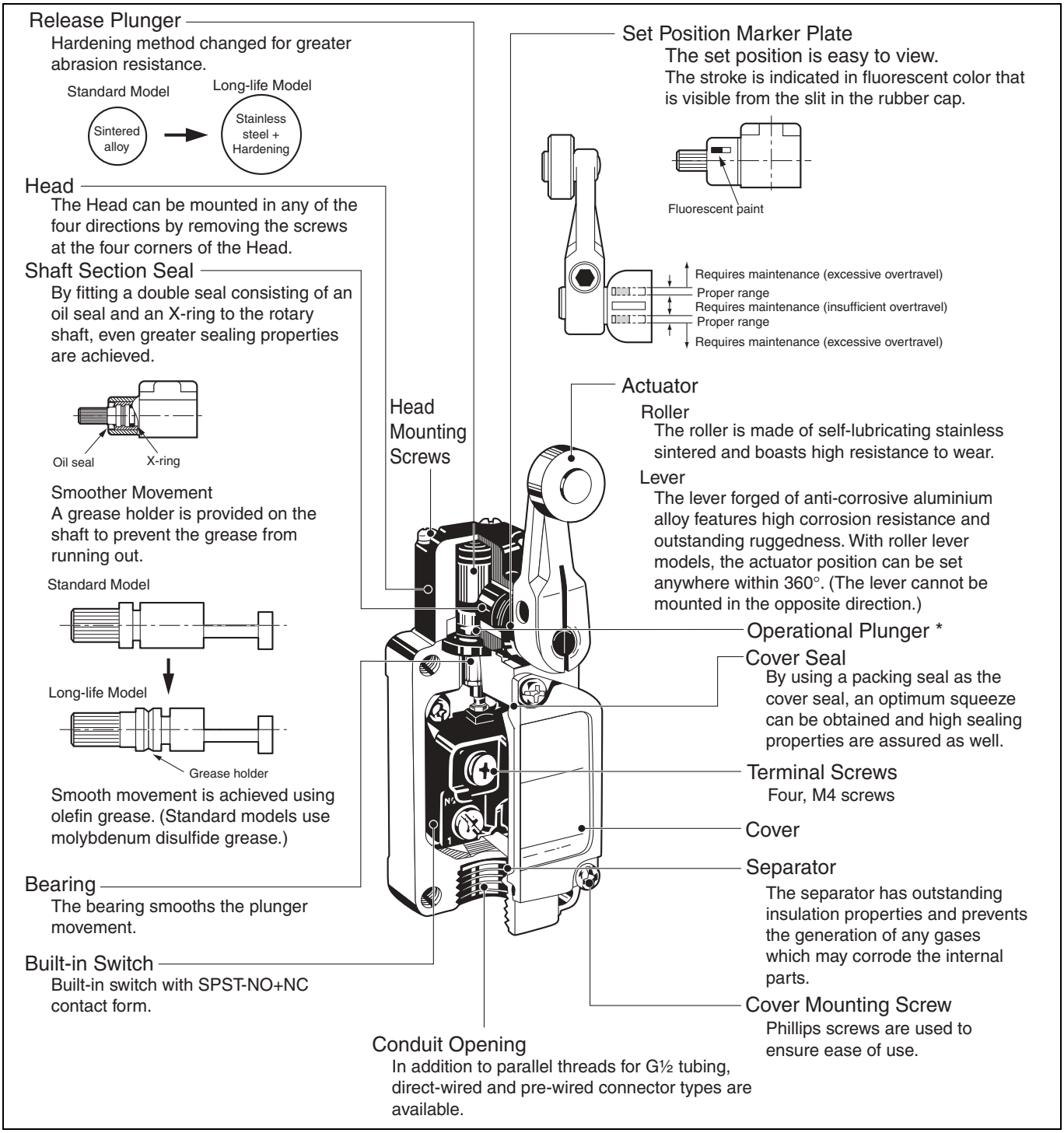

Dimensions and Operating Characteristics

(Unit: mm)

General-purpose and Environment-resistant Switches

Standard Switches

Switches with Roller Lever Actuators

Basic Switches

Roller lever R38

WLCA2-N
WLCA2-2-N
WLCA2-2N-N

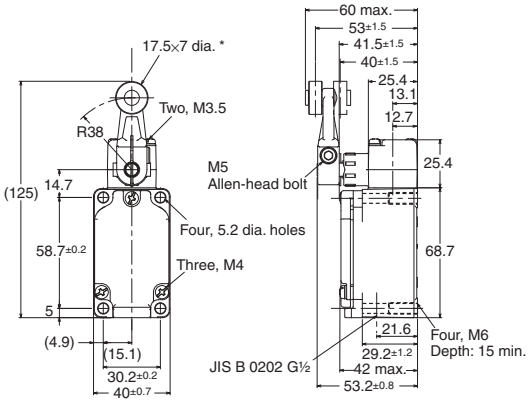

* Stainless sintered roller

Roller lever R50

WLCA2-7-N

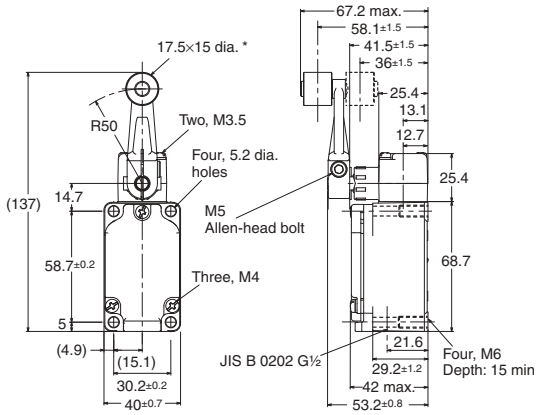

* Stainless sintered roller

Roller lever R63

WLCA2-8-N

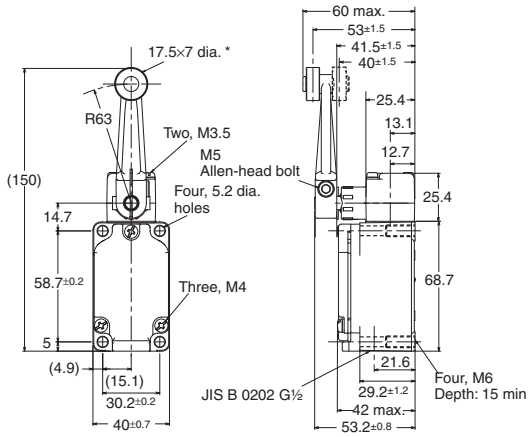

* Stainless sintered roller

Adjustable roller lever

WLCA12-N
WLCA12-2-N
WLCA12-2N-N

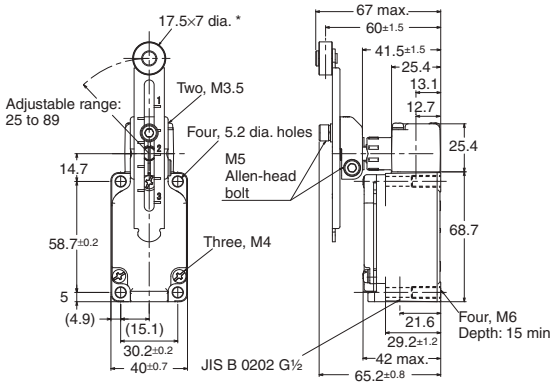

* Stainless sintered roller

Note: Unless otherwise indicated, a tolerance of ±0.4 mm applies to all dimensions.

Operating characteristics		Model	WLCA2-N	WLCA2-2-N	WLCA2-2N-N	WLCA2-7-N	WLCA2-8-N
Operating force	OF	max.	13.34 N	13.34 N	13.34 N	10.2 N	8.04 N
Release force	RF	min.	1.18 N	1.18 N	1.18 N	0.9 N	0.71 N
Pretravel	PT		15±5°	25±5°	20° max.	15±5°	15±5°
Overtravel	OT	min.	70°	60°	70°	70°	70°
Movement Differential	MD	max.	12°	16°	10°	12°	12°

Operating characteristics		Model	WLCA12-N *1	WLCA12-2-N *1	WLCA12-2N-N *1
Operating force	OF	max.	13.34 N	13.34 N	13.34 N
Release force	RF	min.	1.18 N	1.18 N	1.18 N
Pretravel	PT		15±5°	25±5°	20° max
Overtravel	OT	min.	70°	60°	70°
Movement Differential	MD	max.	12°	16°	10°

* The operating characteristics are measured at the lever length of 38 mm.

Switches with Roller Lever Actuators

Basic Switches

Adjustable rod lever 25 to 140 mm

WLCL-N
WLCL-2-N
WLCL-2N-N

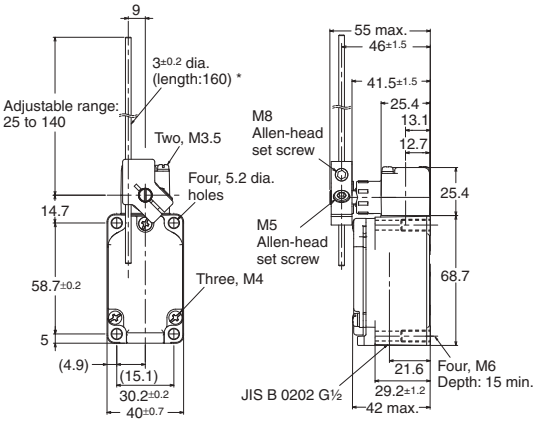

* Stainless steel rod

Adjustable rod lever

WLCAL4-N

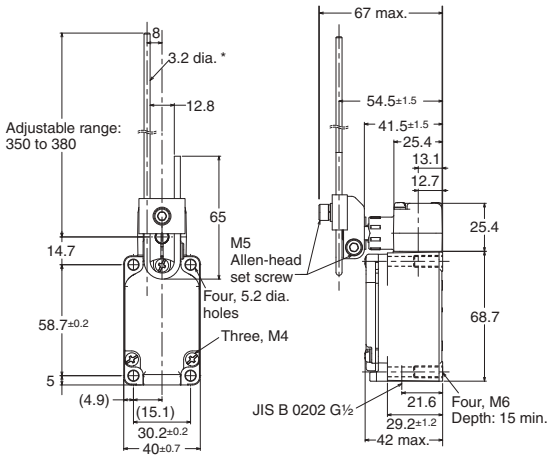

* Stainless steel rod

Rod spring lever

WLCAL5-N

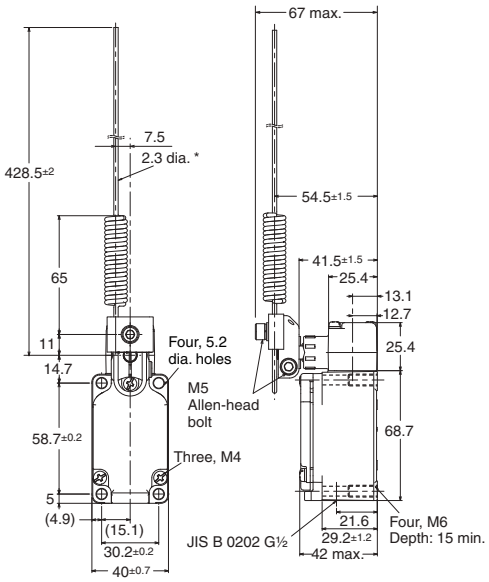

* Piano wire

Note: Unless otherwise indicated, a tolerance of ±0.4 mm applies to all dimensions.

Operating characteristics		Model	WLCL-N *1	WLCL-2-N *1	WLCL-2N-N *1	WLCAL4-N *2	WLCAL5-N
Operating force	**OF**	**max.**	1.39 N	1.39 N	1.39 N	0.98 N	0.9 N
Release force	**RF**	**min.**	0.27 N	0.27 N	0.27 N	0.15 N	0.09 N
Pretravel	**PT**		15±5°	25±5°	20° max	15±5°	15±5°
Overtravel	**OT**	**min.**	70°	60°	70°	70°	70°
Movement Differential	**MD**	**max.**	12°	16°	10°	12°	12°

Note: The actuator on the WLCAL4-N and WLCAL5-N is heavy, which may result in resetting problems depending on the direction the Switch is mounted. Mount the Switch so that the actuator is facing downwards to prevent this problem from occurring.

*1. The operating characteristics are measured at the lever length of 140 mm.
*2. The operating characteristics are measured at a rod length of 380 mm.

Switches with Roller Lever Actuators

High-sensitivity Switches

Roller lever R38

WLG2
WL01G2

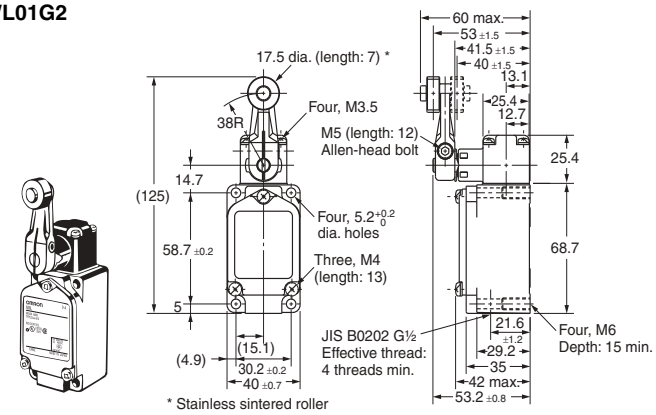

Adjustable rod lever 25 to 140 mm

WLGL
WL01GL

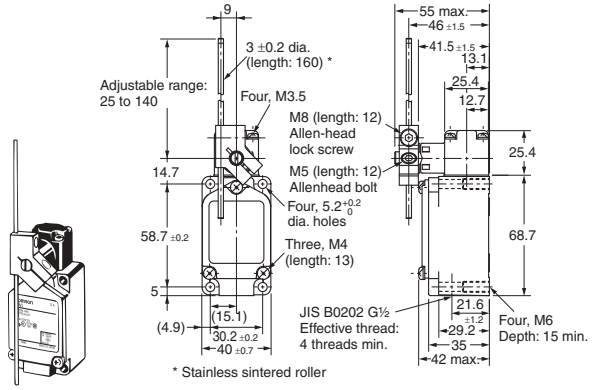

Adjustable Roller Lever R38

WLG12
WL01G12

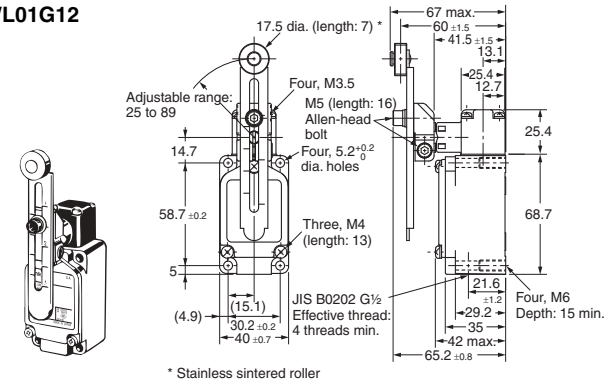

Note: 1. Unless otherwise indicated, a tolerance of ±0.4 mm applies to all dimensions.

Switches with High-precision Actuators

Roller lever R38

WLGCA2
WL01GCA2

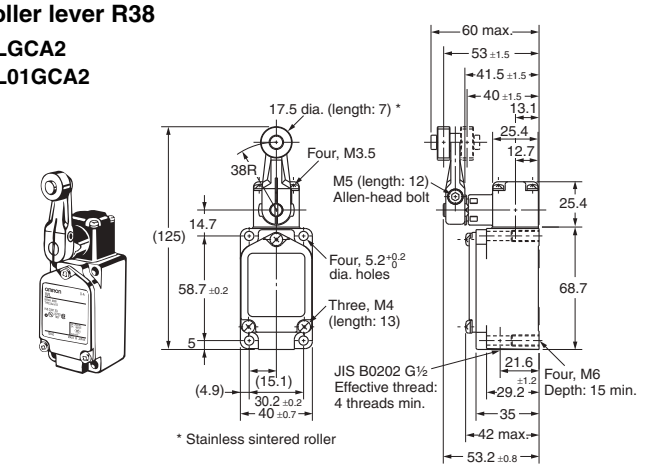

Note: 1. Unless otherwise indicated, a tolerance of ±0.4 mm applies to all dimensions.

Operating characteristics		Model	WLG2 WL01G2	WLG12 *1 WL01G12 *1	WLGL *2 WL01GL *2	WLGCA2 WL01GCA2
Operating force	**OF**	**max.**	9.81 N	9.81 N	2.84 N	13.34 N
Release force	**RF**	**min.**	0.98 N	0.98 N	0.25 N	1.47 N
Pretravel	**PT**		$10^{\circ}{}^{+2^{\circ}}_{-1^{\circ}}$	$10^{\circ}{}^{+2^{\circ}}_{-1^{\circ}}$	$10^{\circ}{}^{+2^{\circ}}_{-1^{\circ}}$	$5^{\circ}{}^{+2^{\circ}}_{0^{\circ}}$
Overtravel	**OT**	**min.**	65°	65°	65°	40°
Movement Differential	**MD**	**max.**	7°	7°	7°	3°

*1. The operating characteristics are measured at the lever length of 38 mm.
*2. The operating characteristics are measured at a rod length of 140 mm.

Switches with Plunger Actuators

Basic Switches

Sealed top plunger

WLD18-N

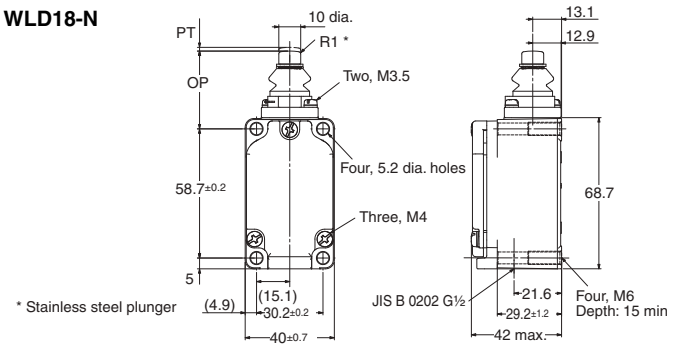

Horizontal plunger

WLSD-N

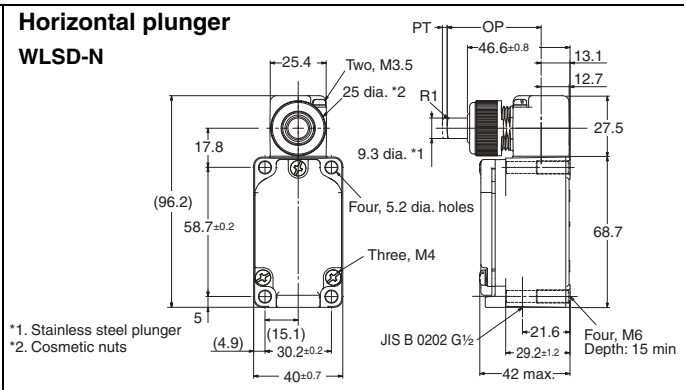

Sealed top-roller plunger

WLD28-N

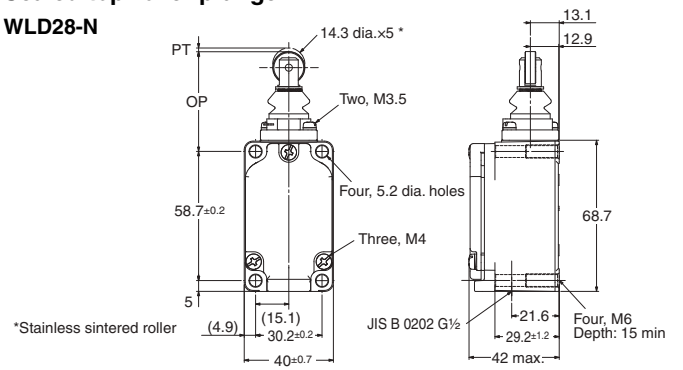

Horizontal-roller plunger

WLSD2-N

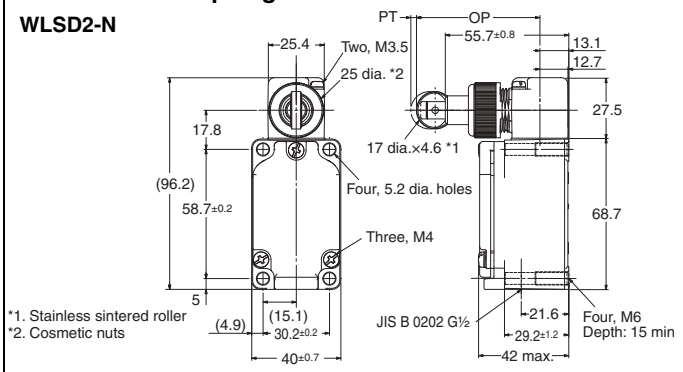

Sealed top-ball plunger

WLD38-N

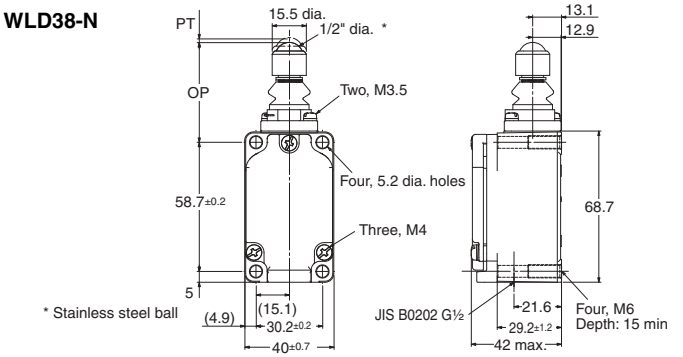

Horizontal-ball plunger

WLSD3-N

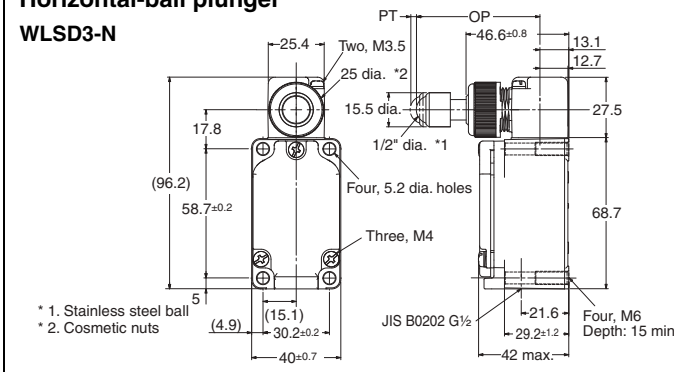

Top-roller plunger

WLD2-N

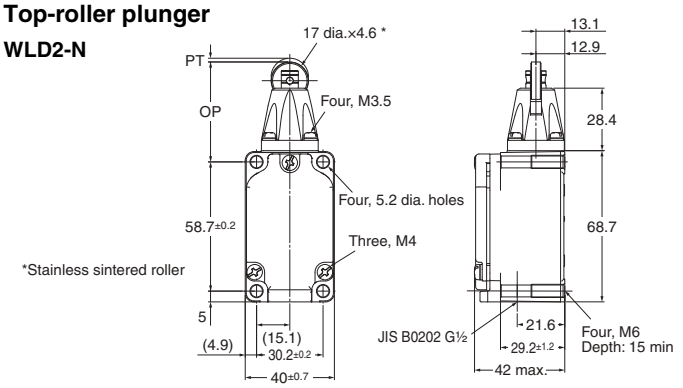

Note: Unless otherwise indicated, a tolerance of ±0.4 mm applies to all dimensions.

Operating characteristics		Model	WLD18-N	WLD28-N	WLD38-N	WLD2-N	WLSD-N	WLSD2-N	WLSD3-N
Operating force	OF	max.	26.67 N	16.67 N	16.67 N	26.67 N	40.03 N	40.03 N	40.03 N
Release force	RF	min.	8.92 N	4.41 N	4.41 N	8.92 N	8.89 N	8.89 N	8.89 N
Pretravel	PT	max.	1.7 mm	1.7 mm	1.7 mm	1.7 mm	2.8 mm	2.8 mm	2.8 mm
Overtravel	OT	min.	6.4 mm	5.6 mm	5.6 mm	5.6 mm	5.6 mm	5.6 mm	4 mm
Movement Differential	MD	max.	1 mm	1 mm	1 mm	1 mm	1 mm	1 mm	1 mm
Operating position	OP		34±0.8 mm	44±0.8 mm	44.5±0.8 mm	44±0.8 mm	40.6±0.8 mm	54.2±0.8 mm	54.1±0.8 mm
Total travel position	TTP	max.	29.5 mm	39.5 mm	41 mm	39.5 mm	---	---	---

Switches with Flexible Rod Actuators

Basic Switches

Coil spring

WLNJ-N

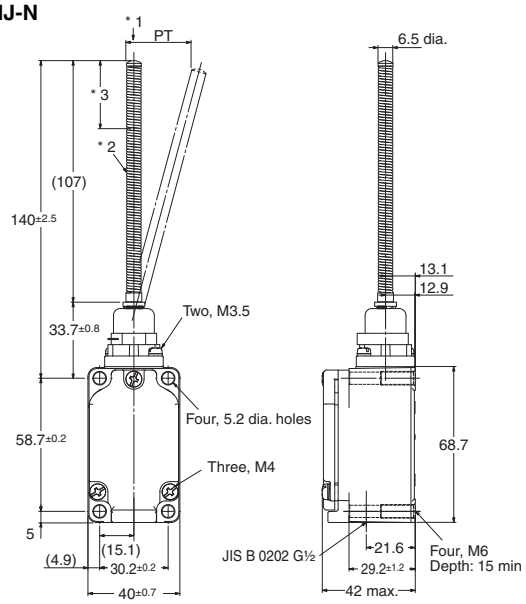

*1. Do not operate the Switch in the direction of the axial center.
*2. Stainless steel coil spring.
*3. The range for operation is 1/3rd of the overall spring length from the end of the spring.

Coil Spring (Multi-wire)

WLNJ-30-N

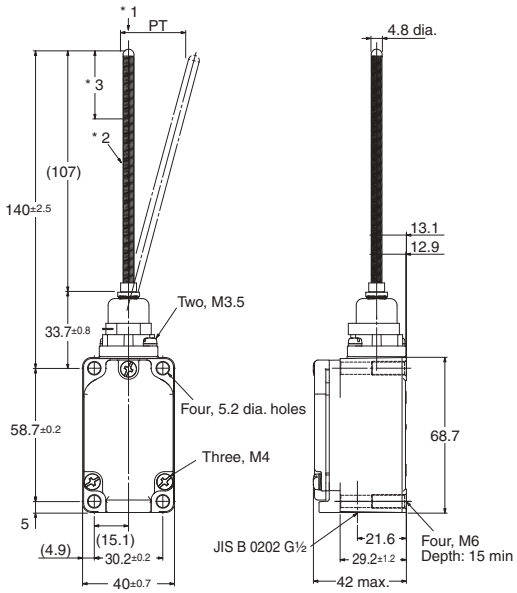

*1. Do not operate the Switch in the direction of the axial center.
*2. Piano wire coil spring.
*3. The range for operation is 1/3rd of the overall spring length from the end of the spring.

Resin rod

WLNJ-2-N

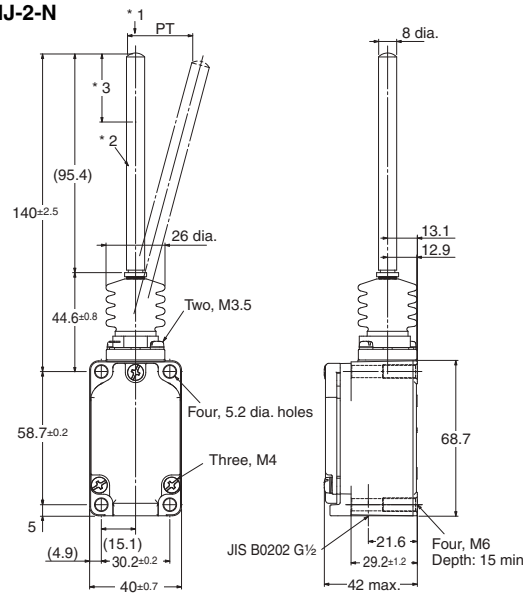

*1. Do not operate the Switch in the direction of the axial center.
*2. Polyamide Resin Rod
*3. The range for operation is 1/3rd of the overall rod length from the end of the rod.

Steel wire

WLNJ-S2-N

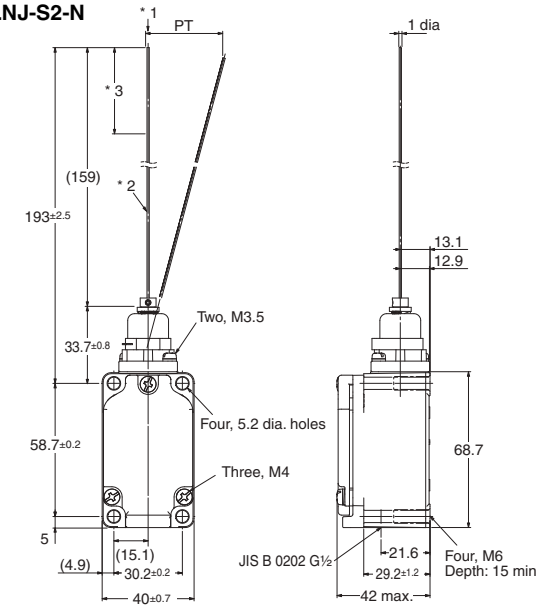

*1. Do not operate the Switch in the direction of the axial center.
*2. Stainless steel wire.
*3. The range for operation is 1/3rd of the overall wire length from the end of the wire.

Note: Unless otherwise indicated, a tolerance of ±0.4 mm applies to all dimensions.

Operating characteristics / Model			WLNJ-N	WLNJ-30-N	WLNJ-2-N	WLNJ-S2-N
Operating force	**OF**	**max.**	1.47 N	1.47 N	1.47 N	0.28 N
Pretravel	**PT**		20±10 mm	20±10 mm	40±20 mm	40±20 mm

* These values are for the top end of the spring, rod, or wire.

Switches with Fork Lock Lever Actuators

Retention Switches

General-purpose

WLCA32-41-N
WLCA32-42-N
WLCA32-43-N
WLCA32-44-N

The WLCA32-41-N is shown in the following diagram.

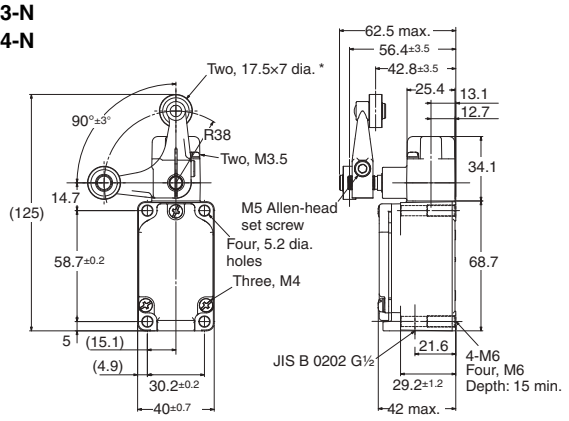

* Plastic Roller
(The WLCA32-041-N to WLCA32-044-N have stainless steel rollers.)

Note: 1. Unless otherwise indicated, a tolerance of ±0.4 mm applies to all dimensions.

Operating characteristics	Model	WLCA32-41 to 44-N
Force necessary to reverse the direction of the lever	**max.**	11.77N
Movement until the lever reverses		50±5°
Movement until switch operation	**max.**	55°
Movement after switch operation	**min.**	35°

Operation indicator Switches

Switches with Roller Lever Actuators

Basic Switches

Roller lever R38

General-purpose Models

WLCA2-LD-N
WLCA2-LE-N

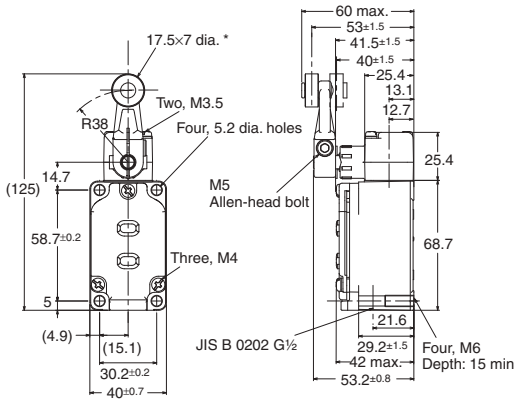

* Stainless sintered roller

Note: Unless otherwise indicated, a tolerance of ±0.4 mm applies to all dimensions.

Operating characteristics			Basic models
Operating force	**OF**	**max.**	13.34 N
Release force	**RF**	**min.**	1.18 N
Pretravel	**PT**		15±5°
Overtravel	**OT**	**min.**	70°
Movement Differential	**MD**	**max.**	12°

Sensor I/O Connector Switches

(For details about applicable cables, refer to ***Connecting Sensor I/O Connectors Cable and Socket*** on page 22.)

Switches with Roller Lever Actuators

Basic Switches

Roller lever R38

Direct-wire Connector type

WLCA2-LDK13-N

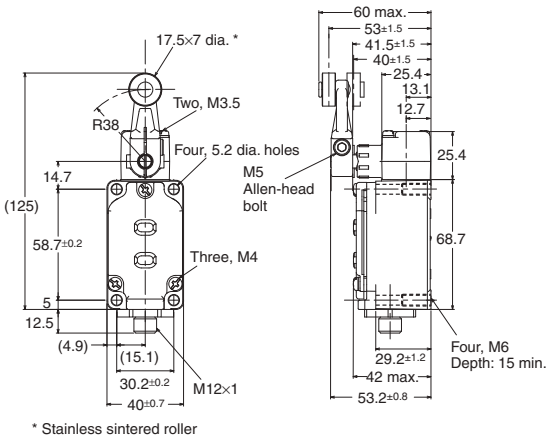

Roller lever R38

Pre-wired Connector type

WLCA2-LD-M1J-N

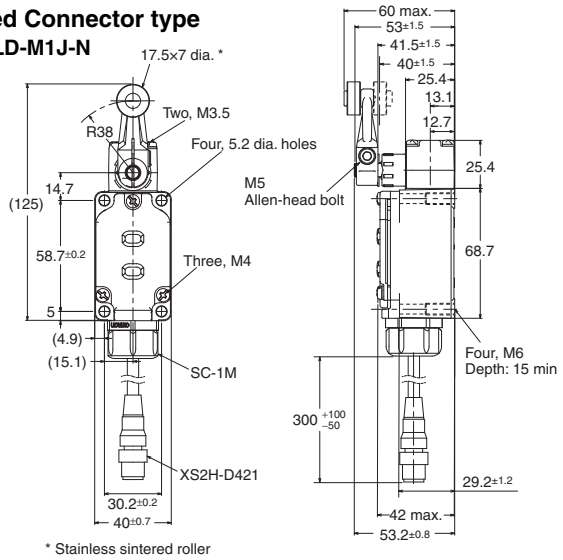

Note: 1. Unless otherwise indicated, a tolerance of ±0.4 mm applies to all dimensions.
2. The models with operation indicators are shown in the above diagrams.

Operating characteristics			Basic models
Operating force	**OF**	**max.**	13.34 N
Release force	**RF**	**min.**	1.18 N
Pretravel	**PT**		15±5°
Overtravel	**OT**	**min.**	70°
Movement Differential	**MD**	**max.**	12°

High-sensitivity and High-precision Switches

Roller lever R38

Direct-wire Connector type

High-sensitivity

WLG2

High-precision

WLGCA2

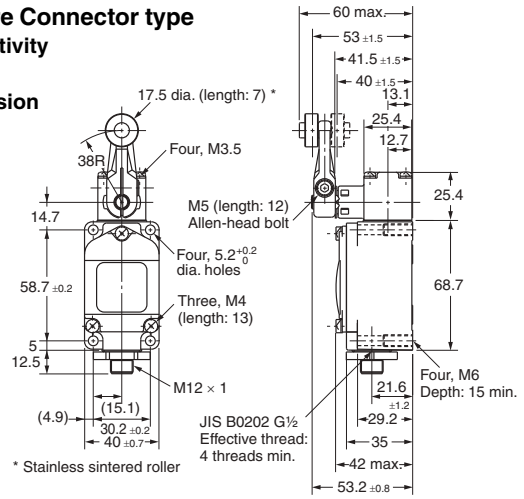

Roller lever R38

Pre-wired Connector type

High-sensitivity

WLG2

High-precision

WLGCA2

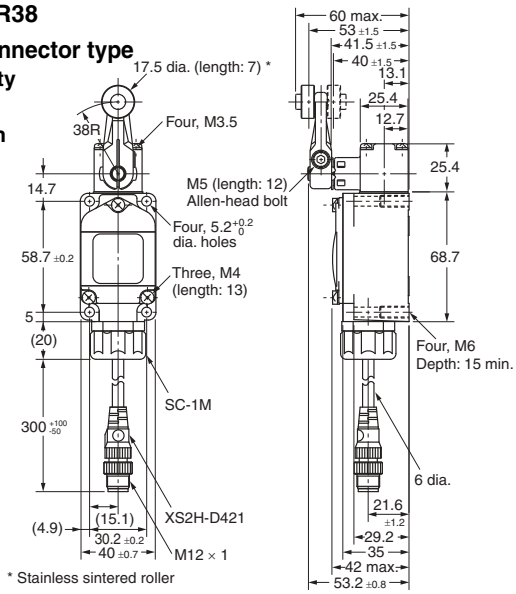

Note: Unless otherwise indicated, a tolerance of ±0.4 mm applies to all dimensions.

Operating characteristics			High-sensitivity	High-precision Models
Operating force	**OF**	**max.**	9.81 N	13.34 N
Release force	**RF**	**min.**	0.98 N	1.47 N
Pretravel	**PT**		$10^{\circ}{}^{+2^{\circ}}_{-1^{\circ}}$	$5^{\circ}{}^{+2^{\circ}}_{0^{\circ}}$
Overtravel	**OT**	**min.**	65°	40°
Movement Differential	**MD**	**max.**	7°	3°

Spatter-prevention Switches

Switches with Roller Lever Actuators

Basic Switches

Roller lever R38

Screw terminal type

WLCA2-□S-N

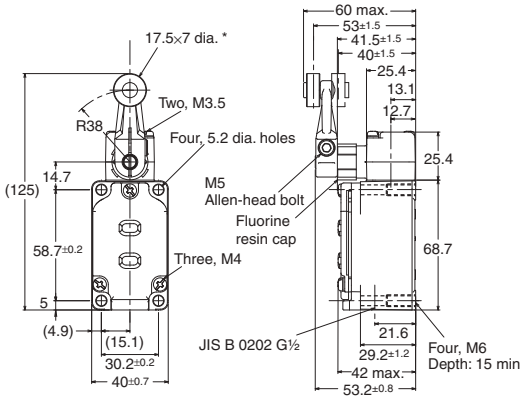

* Stainless sintered roller

Roller lever R38

Pre-wired Connector type

WLCA2-□S-M1J-1-N

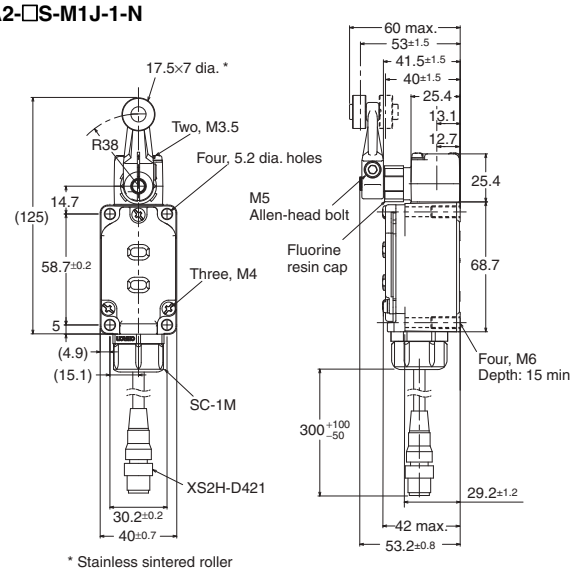

* Stainless sintered roller

Note: 1. Unless otherwise indicated, a tolerance of ±0.4 mm applies to all dimensions.
2. The models with operation indicators are shown in the above diagrams.

High-sensitivity/High-precision Switches

Roller lever R38

Screw terminal type

WLG2-□S

WLGCA2-□S

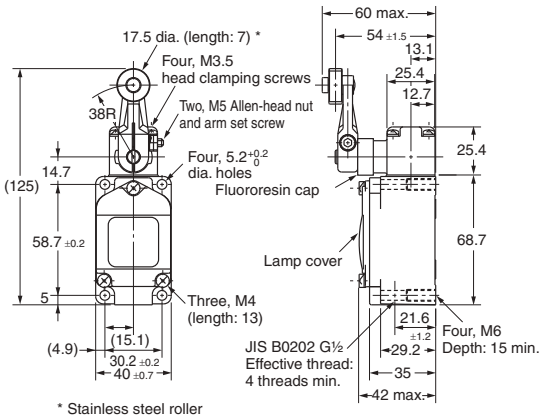

* Stainless steel roller

Roller lever R38

Pre-wired Connector type

WLG2-□S-M1J *

WLGCA2-□S-M1J *

* External dimensions are the same even for different core wires.

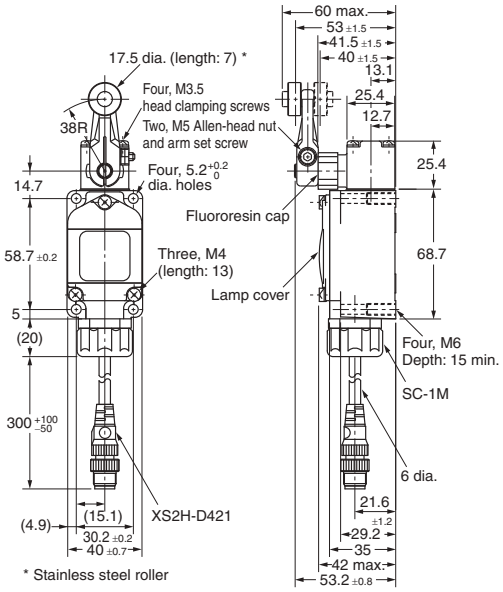

* Stainless steel roller

Note: Unless otherwise indicated, a tolerance of ±0.4 mm applies to all dimensions.

Operating characteristics			Basic models	High-sensitivity	High-precision Models
Operating force	**OF**	**max.**	13.34 N	9.81 N	13.34 N
Release force	**RF**	**min.**	1.18 N	0.98 N	1.47 N
Pretravel	**PT**		15±5°	10° +2° −1°	5° +2° 0°
Overtravel	**OT**	**min.**	70°	65°	40°
Movement Differential	**MD**	**max.**	12°	7°	3°

Switches with Plunger Actuators

Basic Switches

Sealed top-roller plunger

Screw terminal type

WLD28-□S-N

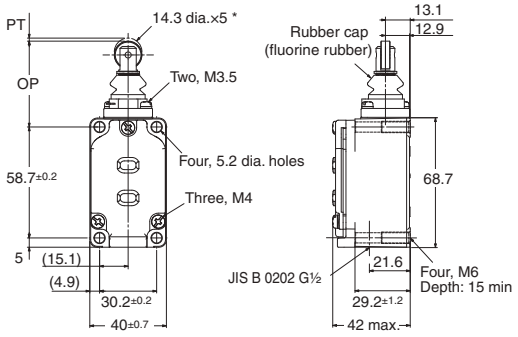

*Stainless sintered roller

Sealed top-roller plunger

Pre-wired Connector type

WLD28-□S-M1J-1-N

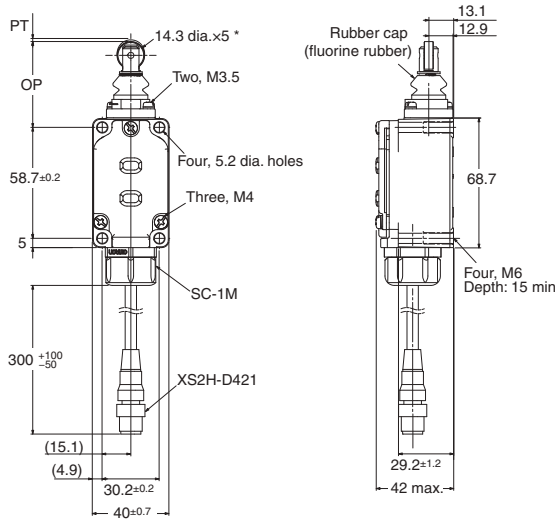

*Stainless sintered roller

Note: 1. Unless otherwise indicated, a tolerance of ±0.4 mm applies to all dimensions.
2. The models with operation indicators are shown in the above diagrams.

Operating characteristics			Basic models
Operating force	**OF**	**max.**	16.67 N
Release force	**RF**	**min.**	4.41 N
Pretravel	**PT**		1.7 mm max.
Overtravel	**OT**	**min.**	5.6 mm
Movement Differential	**MD**	**max.**	1 mm
Operating force	**OF**	**max.**	44±0.8 mm
Pretravel	**PT**		39.5 mm

Long-life Switches

Switches with Roller Lever Actuators

Basic Switches

Roller lever R38

Screw terminal type

WLMCA2-LD-N

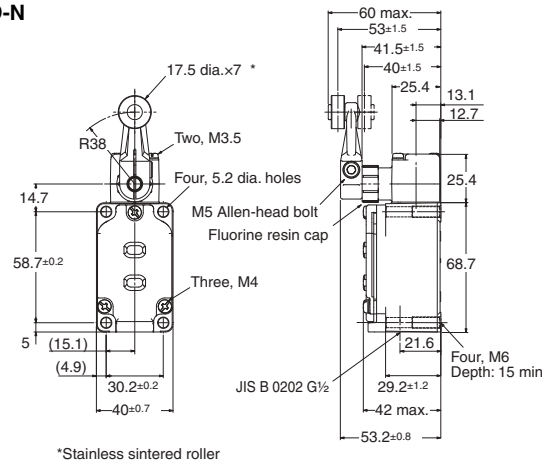

Roller lever R38

Direct-wire Connector type

WLMCA2-LDK13-N

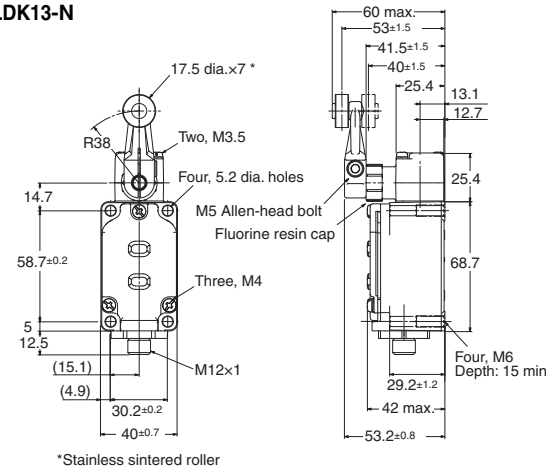

Roller lever R38

Pre-wired Connector type

WLMCA2-LD-M1J-N

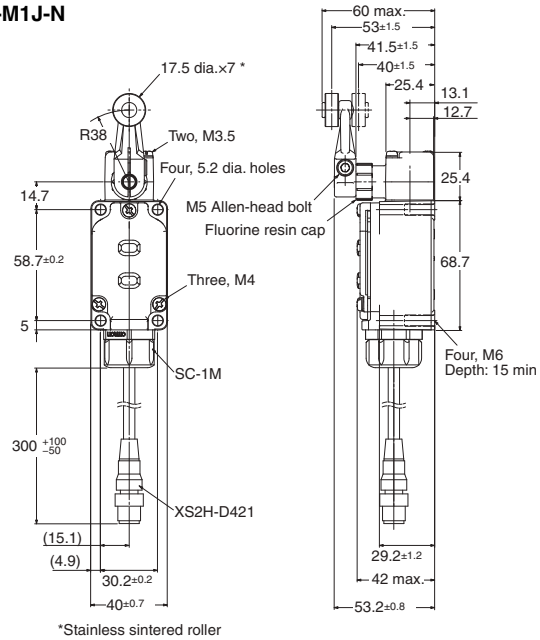

Note: 1. Unless otherwise indicated, a tolerance of ±0.4 mm applies to all dimensions.
2. The models with operation indicators are shown in the above diagrams.

Operating characteristics			Basic models
Operating force	**OF**	**max.**	13.34 N
Release force	**RF**	**min.**	1.18 N
Pretravel	**PT**		15±5°
Overtravel	**OT**	**min.**	70°
Movement Differential	**MD**	**max.**	12°

Switches with Roller Lever Actuators

High-sensitivity and High-precision Switches

Roller lever R38

Screw terminal type

WLMG□-LD

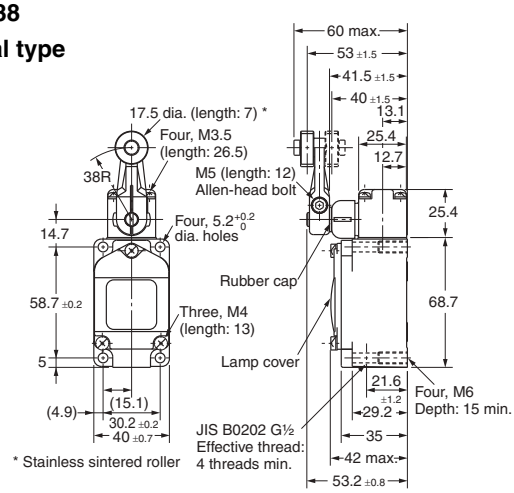

Roller lever R38

Direct-wire Connector type

WLMG□-LD□

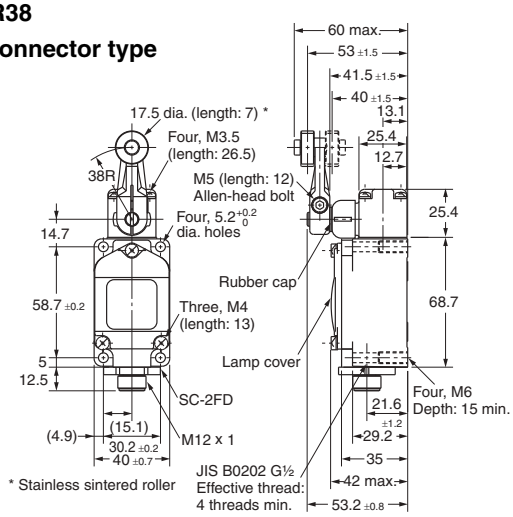

Roller lever R38

Pre-wired Connector type

WLMG□-LD□

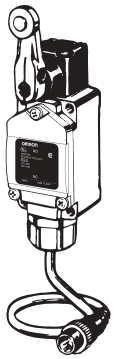

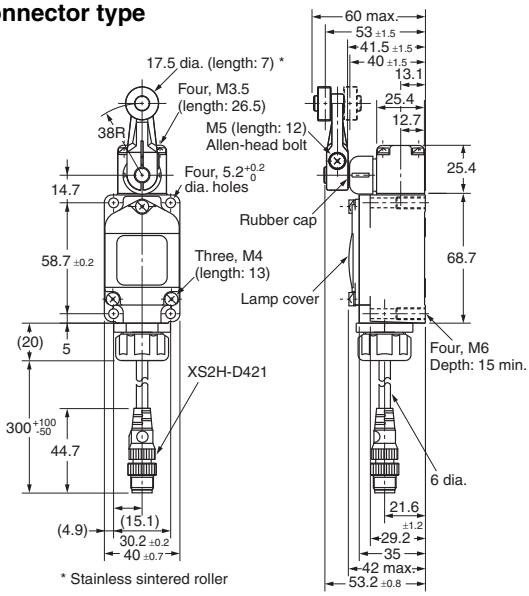

Note: Unless otherwise indicated, a tolerance of ±0.4 mm applies to all dimensions.

Operating characteristics			High-sensitivity	High-precision Models
Operating force	**OF**	**max.**	9.81 N	13.34 N
Release force	**RF**	**min.**	0.98 N	1.47 N
Pretravel	**PT**		10° +2° −1°	5° +2° 0°
Overtravel	**OT**	**min.**	65°	40°
Movement Differential	**MD**	**max.**	7°	3°

Actuators (Levers Only)

Lever: Only rotating lever models are illustrated.

WL-1A100
Standard Lever

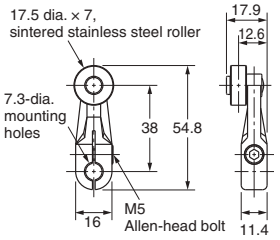

WL-1A115
Resin Roller

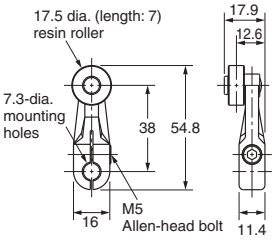

WL-1A400
Bearing Roller

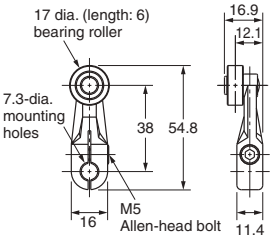

WL-1A118
Nylon Roller:
Roller Width: 30 mm

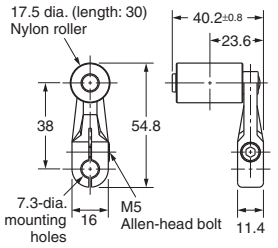

WL-1A105
Double Nuts

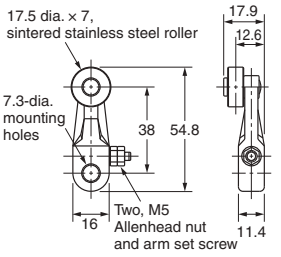

WL-1A103S
Spatter Prevention

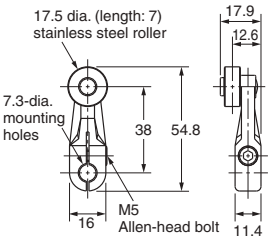

WL-1A200
Lever Length: 50
Roller Width: 15

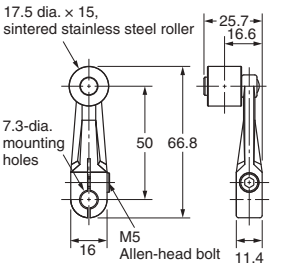

WL-1A300
Lever Length: 63

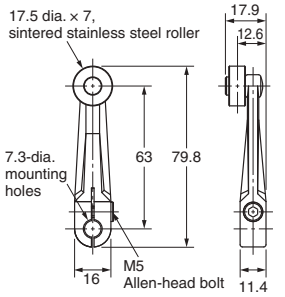

WL-2A100

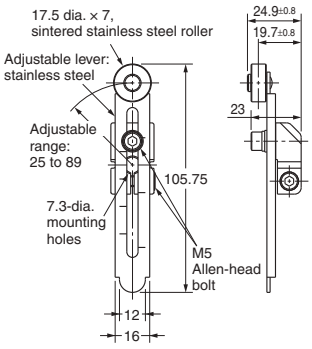

WL-2A111
Resin Roller

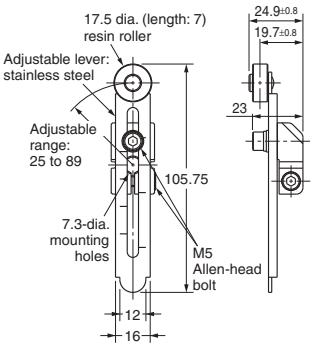

WL-2A107
Double Nuts

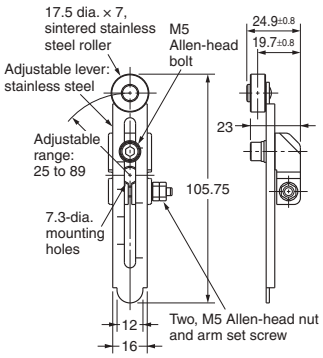

WL-2A108
Resin Roller

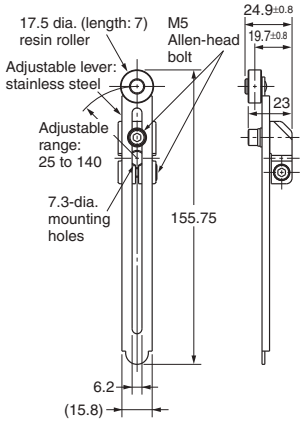

WL-2A122

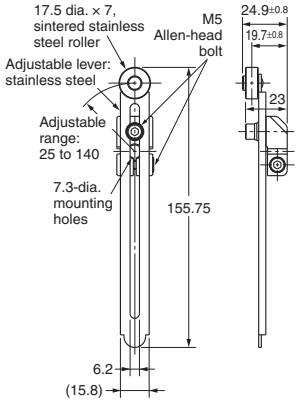

WL-2A106

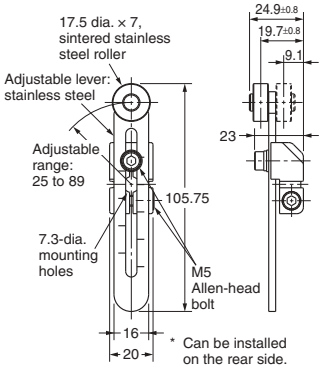

WL-2A130

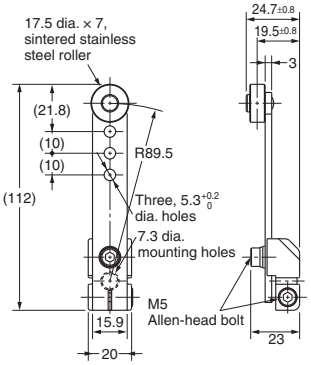

WL-2A104

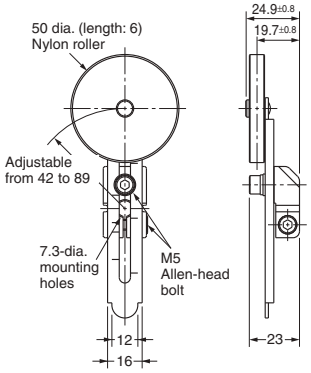

Note: Unless otherwise indicated, a tolerance of ±0.4 mm applies to all dimensions.

Lever: Only rotating lever models are illustrated.

WL-2A110

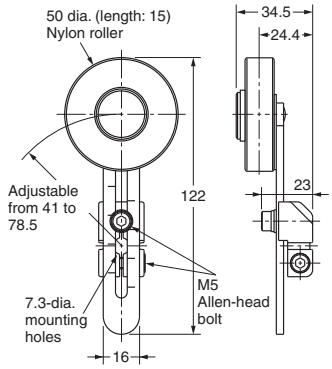

WL-2A105

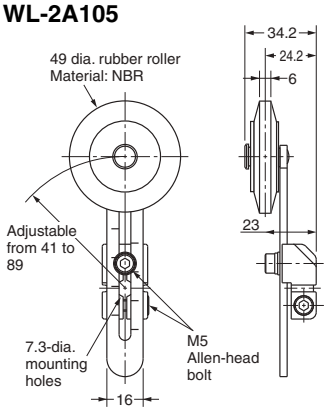

WL-1A106

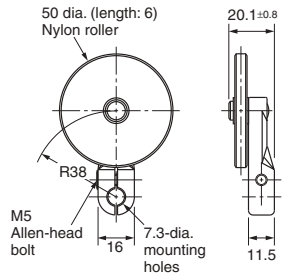

WL-1A110

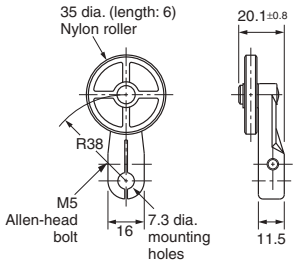

WL-4A100

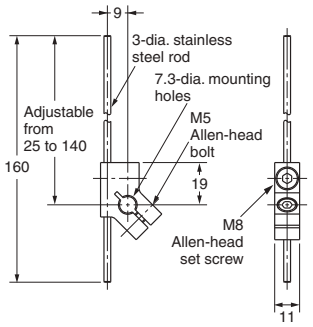

WL-4A201

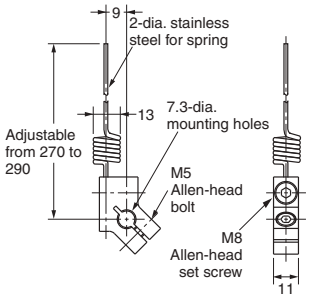

WL-3A100

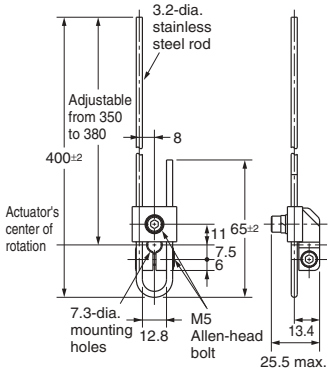

WL-3A106 Double Nut

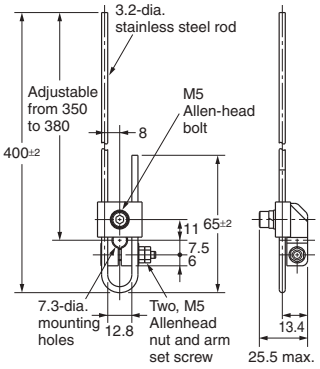

WL-3A108

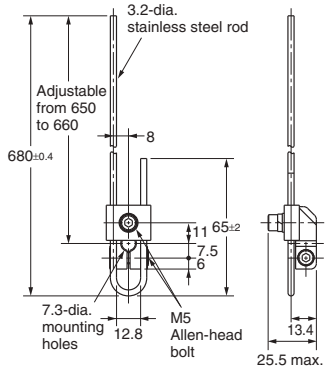

WL-3A200

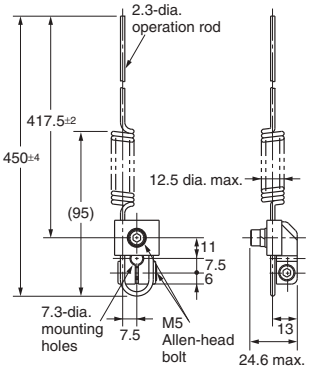

WL-3A203

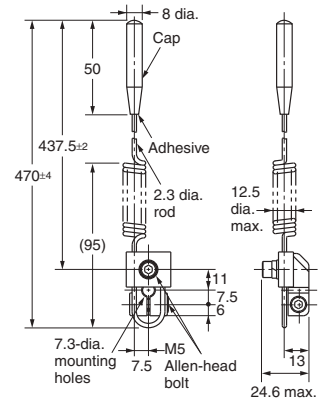

WL-4A112

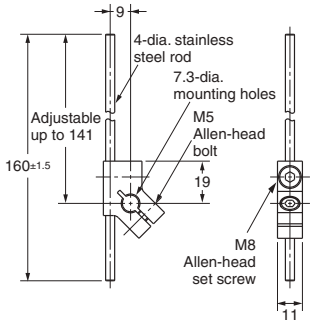

WL-2A129

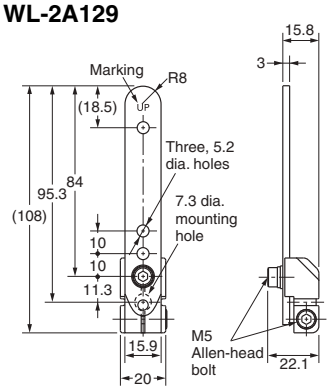

WL-5A101

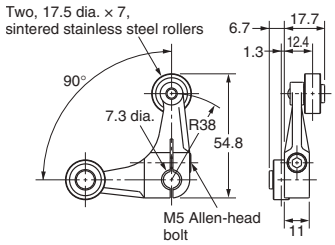

WL-5A100 has a plastic roller

WL-5A103

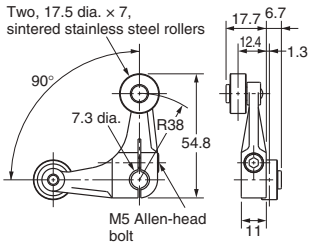

WL-5A102 has a plastic roller

WL-5A105

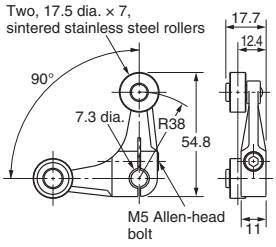

WL-5A104 has a plastic roller

Note: 1. Unless otherwise indicated, a tolerance of ±0.4 mm applies to all dimensions.
2. When using the adjustable roller (rod) lever, make sure that the lever is facing downwards.
Use caution, as telegraphing (the Switch turns ON and OFF repeatedly due to inertia) may occur.

Model Replacement Table (Replacing WL Basic Models with WL-N Basic Models)

Manufacturing of the basic WL models is scheduled to be discontinued. Use the following table to find the corresponding WL-N-series models and order them instead.

WL	WL-N
WLCA2	WLCA2-N
WL01CA2	WLCA2-N
WLH2	WLCA2-N
WL01H2	WLCA2-N
WLCA2-2	WLCA2-2-N
WL01CA2-2	WLCA2-2-N
WLCA2-2N	WLCA2-2N-N
WL01CA2-2N	WLCA2-2N-N
WLCA2-7	WLCA2-7-N
WL01CA2-7	WLCA2-7-N
WLCA2-8	WLCA2-8-N
WL01CA2-8	WLCA2-8-N
WLCA12	WLCA12-N
WL01CA12	WLCA12-N
WLH12	WLCA12-N
WL01H12	WLCA12-N
WLCA12-2	WLCA12-2-N
WL01CA12-2	WLCA12-2-N
WLCA12-2N	WLCA12-2N-N
WL01CA12-2N	WLCA12-2N-N
WLCL	WLCL-N
WL01CL	WLCL-N
WLHL	WLCL-2N-N
WL01HL	WLCL-2N-N
WLCL-2	WLCL-2-N
WLCL-2N	WLCL-2N-N
WL01CL-2N	WLCL-2N-N
WLHAL4	WLCAL4-N
WLHAL5	WLCAL5-N
WLCA32-41	WLCA32-41-N
WL01CA32-41	WLCA32-41-N
WLCA32-42	WLCA32-42-N
WLCA32-43	WLCA32-43-N
WL01CA32-43	WLCA32-43-N
WLCA32-44	WLCA32-44-N
WL01CA32-44	WLCA32-44-N
WLD	WLD18-N
WL01D	WLD18-N
WLD2	WLD28-N
WL01D2	WLD28-N
WLD3	WLD38-N
WL01D3	WLD38-N
WLD28	WLD28-N
WL01D28	WLD28-N
WLSD	WLSD-N
WL01SD	WLSD-N
WLSD2	WLSD2-N
WL01SD2	WLSD2-N
WLSD3	WLSD3-N
WL01SD3	WLSD3-N

WL	WL-N
WLNJ	WLNJ-N
WL01NJ	WLNJ-N
WLNJ-30	WLNJ-30-N
WL01NJ-30	WLNJ-30-N
WLNJ-2	WLNJ-2-N
WL01NJ-2	WLNJ-2-N
WLNJ-S2	WLNJ-S2-N
WL01NJ-S2	WLNJ-S2-N
WLCA2-LE	WLCA2-LE-N
WLCA2-LD	WLCA2-LD-N
WLH2-LE	WLCA2-LE-N
WLH2-LD	WLCA2-LD-N
WLCA2-2LE	WLCA2-2LE-N
WLCA2-2LD	WLCA2-2LD-N
WLCA2-2NLE	WLCA2-2NLE-N
WLCA2-2NLD	WLCA2-2NLD-N
WLCA2-7LE	WLCA2-7LE-N
WLCA2-7LD	WLCA2-7LD-N
WLCA2-8LE	WLCA2-8LE-N
WLCA2-8LD	WLCA2-8LD-N
WLCA12-LE	WLCA12-LE-N
WLCA12-LD	WLCA12-LD-N
WLH12-LE	WLCA12-LE-N
WLH12-LD	WLCA12-LD-N
WLCA12-2LE	WLCA12-2LE-N
WLCA12-2LD	WLCA12-2LD-N
WLCA12-2NLE	WLCA12-2NLE-N
WLCA12-2NLD	WLCA12-2NLD-N
WLCL-LE	WLCL-LE-N
WLCL-LD	WLCL-LD-N
WLHL-LE	WLCL-2NLE-N
WLHL-LD	WLCL-2NLD-N
WLCL-2LE	WLCL-2LE-N
WLCL-2LD	WLCL-2LD-N
WLCL-2NLE	WLCL-2NLE-N
WLCL-2NLD	WLCL-2NLD-N
WLHAL4-LE	WLCAL4-LE-N
WLHAL4-LD	WLCAL4-LD-N
WLHAL5-LE	WLCAL5-LE-N
WLHAL5-LD	WLCAL5-LD-N
WLCA32-41LE	WLCA32-41LE-N
WLCA32-41LD	WLCA32-41LD-N
WLCA32-42LE	WLCA32-42LE-N
WLCA32-43LE	WLCA32-43LE-N
WLCA32-43LD	WLCA32-43LD-N
WLD-LE	WLD18-LE-N
WLD-LD	WLD18-LD-N
WLD2-LE	WLD28-LE-N
WLD2-LD	WLD28-LD-N
WLD3-LE	WLD38-LE-N

WL	WL-N
WLD3-LD	WLD38-LD-N
WLD28-LE	WLD28-LE-N
WLD28-LD	WLD28-LD-N
WLSD-LE	WLSD-LE-N
WLSD-LD	WLSD-LD-N
WLSD2-LE	WLSD2-LE-N
WLSD2-LD	WLSD2-LD-N
WLSD3-LE	WLSD3-LE-N
WLSD3-LD	WLSD3-LD-N
WLNJ-LE	WLNJ-LE-N
WLNJ-LD	WLNJ-LD-N
WLNJ-30LE	WLNJ-30LE-N
WLNJ-30LD	WLNJ-30LD-N
WLNJ-2LE	WLNJ-2LE-N
WLNJ-2LD	WLNJ-2LD-N
WLNJ-S2LE	WLNJ-S2LE-N
WLNJ-S2LD	WLNJ-S2LD-N
WLCA2-LDK13	WLCA2-LDK13-N
WLCA2-55LDK13	WLCA2-55LDK13-N
WLCA2-LDK43	WLCA2-LDK43-N
WLCA2-55LDK43	WLCA2-55LDK43-N
WLD2-LDK13	WLD28-LDK13-N
WLD2-55LDK13	WLD28-55LDK13-N
WLD2-LDK43	WLD28-LDK43-N
WLD2-55LDK43	WLD28-55LDK43-N
WLH2-LDK13	WLCA2-LDK13-N
WLH2-55LDK13	WLCA2-55LDK13-N
WLH2-LDK43	WLCA2-LDK43-N
WLH2-55LDK43	WLCA2-55LDK43-N
WLCA2-55LD-M1J	WLCA2-55LD-M1J-N
WLCA2-LD-M1GJ	WLCA2-LD-M1GJ-N
WLCA2-55LD-M1GJ	WLCA2-55LD-M1GJ-N
WLCA2-55LD-M1JB	WLCA2-55LD-M1JB-N
WLCA2-LD-DGJ03	WLCA2-LD-DGJ-N
WLCA2-55LD-DGJ03	WLCA2-55LD-DGJ-N
WLCA2-LD-DK1EJ03	WLCA2-LD-DK1EJ-N
WLCA2-55LD-DK1EJ03	WLCA2-55LD-DK1EJ-N
WLD2-LD-M1J	WLD28-LD-M1J-N
WLD2-55LD-M1J	WLD28-55LD-M1J-N
WLD2-LD-M1GJ	WLD28-LD-M1GJ-N
WLD2-55LD-M1GJ	WLD28-55LD-M1GJ-N
WLD2-55LD-M1JB	WLD28-55LD-M1JB-N
WLD2-LD-DGJ03	WLD28-LD-DGJ-N
WLD2-LD-DK1EJ03	WLD28-LD-DK1EJ-N
WLD2-55LD-DK1EJ03	WLD28-55LD-DK1EJ-N
WLH2-LD-M1J	WLCA2-LD-M1J-N
WLH2-LD-M1GJ	WLCA2-LD-M1GJ-N
WLH2-LD-DGJ03	WLCA2-LD-DGJ-N
WLCA2-55	WLCA2-55-N
WLCA2-55LD	WLCA2-55LD-N

WL	WL-N
WLCA2-55LE	WLCA2-55LE-N
WLCA2-139	WLCA2-139-N
WLCA2-139LD2	WLCA2-139LD2-N
WLCA2-139LD3	WLCA2-139LD3-N
WLCA2-140	WLCA2-140-N
WLCA2-141	WLCA2-141-N
WLCA2-141LD2	WLCA2-141LD2-N
WLCA2-141LD3	WLCA2-141LD3-N
WLCA2-RP60	WLCA2-RP60-N
WLCA2-RP60LD2	WLCA2-RP60LD2-N
WLCA2-RP60LD3	WLCA2-RP60LD3-N
WLCA2-TH	WLCA2-TH-N
WLCA2-TC	WLCA2-TC-N
WLCA2-RP	WLCA2-RP-N
WLCA2-P1	WLCA2-P1-N
WLH2-55	WLCA2-55-N
WLH2-55LD	WLCA2-55LD-N
WLH2-55LE	WLCA2-55LE-N
WLH2-139	WLCA2-139-N
WLH2-140	WLCA2-140-N
WLH2-141	WLCA2-141-N
WLH2-141LD3	WLCA2-141LD3-N
WLH2-RP60	WLCA2-RP60-N
WLH2-RP60LD3	WLCA2-RP60LD3-N
WLH2-TH	WLCA2-TH-N
WLH2-TC	WLCA2-TC-N
WLH2-RP	WLCA2-RP-N
WLH2-P1	WLCA2-P1-N
WLCA2-255	WLCA2-255-N
WLCA2-255LD	WLCA2-255LD-N
WLCA2-255LE	WLCA2-255LE-N
WLCA2-2139	WLCA2-2139-N
WLCA2-2139LD2	WLCA2-2139LD2-N
WLCA2-2139LD3	WLCA2-2139LD3-N
WLCA2-2RP60	WLCA2-2RP60-N
WLCA2-2RP60LD2	WLCA2-2RP60LD2-N
WLCA2-2RP60LD3	WLCA2-2RP60LD3-N
WLCA2-2TH	WLCA2-2TH-N
WLCA2-2TC	WLCA2-2TC-N
WLCA2-2N55	WLCA2-2N55-N
WLCA2-2N55LD	WLCA2-2N55LD-N
WLCA2-2N55LE	WLCA2-2N55LE-N
WLCA2-2N139	WLCA2-2N139-N
WLCA2-2N140	WLCA2-2N140-N
WLCA2-2NTH	WLCA2-2NTH-N
WLCA2-2NTC	WLCA2-2NTC-N
WLCA12-55	WLCA12-55-N
WLCA12-55LD	WLCA12-55LD-N
WLCA12-55LE	WLCA12-55LE-N
WLCA12-139	WLCA12-139-N
WLCA12-140	WLCA12-140-N
WLCA12-141	WLCA12-141-N

WL	WL-N
WLCA12-RP60	WLCA12-RP60-N
WLCA12-TH	WLCA12-TH-N
WLCA12-TC	WLCA12-TC-N
WLCA12-RP	WLCA12-RP-N
WLCA12-P1	WLCA12-P1-N
WLH12-TH	WLCA12-TH-N
WLH12-TC	WLCA12-TC-N
WLH12-RP	WLCA12-RP-N
WLH12-P1	WLCA12-P1-N
WLCA12-2TH	WLCA12-2TH-N
WLCA12-2TC	WLCA12-2TC-N
WLCA12-2NTH	WLCA12-2NTH-N
WLCA12-2NTC	WLCA12-2NTC-N
WLCL-55	WLCL-55-N
WLCL-55LD	WLCL-55LD-N
WLCL-139	WLCL-139-N
WLCL-140	WLCL-140-N
WLCL-RP60	WLCL-RP60-N
WLCL-TH	WLCL-TH-N
WLCL-TC	WLCL-TC-N
WLCL-RP	WLCL-RP-N
WLCL-P1	WLCL-P1-N
WLHL-TH	WLCL-2NTH-N
WLHL-TC	WLCL-2NTC-N
WLHL-RP	WLCL-2NRP-N
WLHL-P1	WLCL-2NP1-N
WLGL-TH	WLGL-TH-N
WLCL-2TH	WLCL-2TH-N
WLCL-2TC	WLCL-2TC-N
WLCL-2RP	WLCL-2RP-N
WLCL-2NTH	WLCL-2NTH-N
WLCL-2NTC	WLCL-2NTC-N
WLD2-55	WLD28-55-N
WLD2-55LD	WLD28-55LD-N
WLD2-55LE	WLD28-55LE-N
WLD2-139	WLD28-139-N
WLD2-RP60	WLD28-RP60-N
WLD2-TH	WLD28-TH-N
WLD2-TC	WLD28-TC-N
WLD2-RP	WLD28-RP-N
WLD28-55	WLD28-55-N
WLD28-55LD	WLD28-55LD-N
WLD28-55LE	WLD28-55LE-N
WLD28-139	WLD28-139-N
WLD28-140	WLD28-140-N
WLD28-RP60	WLD28-RP60-N
WLD28-TH	WLD28-TH-N
WLD28-RP	WLD28-RP-N
WLSD-55	WLSD-55-N
WLSD-55LD	WLSD-55LD-N
WLSD-139	WLSD-139-N
WLSD-RP60	WLSD-RP60-N

WL	WL-N
WLSD-TH	WLSD-TH-N
WLSD-TC	WLSD-TC-N
WLSD-RP	WLSD-RP-N
WLSD2-55	WLSD2-55-N
WLSD2-55LD	WLSD2-55LD-N
WLSD2-139	WLSD2-139-N
WLSD2-140	WLSD2-140-N
WLSD2-RP60	WLSD2-RP60-N
WLSD2-TH	WLSD2-TH-N
WLSD2-TC	WLSD2-TC-N
WLSD2-RP	WLSD2-RP-N
WLNJ-55	WLNJ-55-N
WLNJ-55LD	WLNJ-55LD-N
WLNJ-139	WLNJ-139-N
WLNJ-140	WLNJ-140-N
WLNJ-RP60	WLNJ-RP60-N
WLNJ-TH	WLNJ-TH-N
WLNJ-TC	WLNJ-TC-N
WLNJ-RP	WLNJ-RP-N
WLNJ-255	WLNJ-255-N
WLNJ-255LD	WLNJ-255LD-N
WLNJ-2140	WLNJ-2140-N
WLNJ-2RP60	WLNJ-2RP60-N
WLNJ-2RP	WLNJ-2RP-N
WLCA2-LEAS	WLCA2-LEAS-N
WLH2-LEAS	WLCA2-LEAS-N
WLCA2-LDAS	WLCA2-LDAS-N
WLH2-LDAS	WLCA2-LDAS-N
WLCA2-LES	WLCA2-LES-N
WLH2-LES	WLCA2-LES-N
WLCA2-LDS	WLCA2-LDS-N
WLH2-LDS	WLCA2-LDS-N
WLD28-LES	WLD28-LES-N
WLD28-LDS	WLD28-LDS-N
WLMCA2-LD	WLMCA2-LD-N
WLMCA2-LDK13A	WLMCA2-LDK13A-N
WLMCA2-LDK13	WLMCA2-LDK13-N
WLMCA2-LDK43A	WLMCA2-LDK43A-N
WLMCA2-LDK43	WLMCA2-LDK43-N
WLMCA2-LD-M1J	WLMCA2-LD-M1J-N
WLMCA2-LD-DGJ03	WLMCA2-LD-DGJ-N
WLMH2-LD	WLMCA2-LD-N
WLMH2-LDK13A	WLMCA2-LDK13A-N
WLMH2-LDK13	WLMCA2-LDK13-N
WLMH2-LDK43A	WLMCA2-LDK43A-N
WLMH2-LDK43	WLMCA2-LDK43-N
WLMH2-LD-M1J	WLMCA2-LD-M1J-N
WLMH2-LD-DGJ03	WLMCA2-LD-DGJ-N
WLRCA2	WLRCA2-N
WLRH2	WLRCA2-N
WLRCA2-2	WLRCA2-2-N
WLRCA2-2N	WLRCA2-2N-N

WL	WL-N
WLRCA2	WLRCA2-N
WLRH2	WLRCA2-N
WLRCA2-2	WLRCA2-2-N
WLRCA2-2N	WLRCA2-2N-N
WLRCL	WLRCA2-N
WLRCA2-2	WLRCA2-2-N
WLRCA2-2N	WLRCA2-2N-N
WLRCA32	WLRCA32-N
WLRCA2-LDS	WLRCA2-LDS-N
WLRH2-LES	WLRCA2-LES-N
WLRH2-LDS	WLRCA2-LDS-N

Model Replacement Table (Replacing WL-N High-sensitivity and High-precision Models with WL High-sensitivity and High-precision Models)

The WL-N high-sensitivity and high-precision models have been integrated into the WL Series. To use a WL-N high-sensitivity or high-precision model, find the corresponding WL high-sensitivity or high-precision model in the following model replacement table, and order the switch with the WL model number.

WL-N	WL
WLG2-TH-N	WL01G2-TH-F
	WLG2-TH-F
	WLG2-TH
WLG2-N	WL01G2
	WLG2
WLG2-LDS-N	WL01G2-LDS
	WLG2-LDS
WLG2-LD-N	WL01G2-LD
	WLG2-LD
WLG2-LD-M1J-N	WL01G2-LD-M1J
	WLG2-LD-M1J
WLG2-LD-M1JB-N	WLG2-LD-M1JB 0.3M
WLG2-LD-M1GJ-N	WLG2-LD-M1GJ 0.3M
WLG2-LD-DGJ-N	WL01G2-LD-DGJ03
	WLG2-LD-DGJ03
WLG12-TH-N	WL01G12-TH
	WLG12-TH
WLG12-N	WL01G12
	WLG12
WLRG2-N	WLR01G2
	WLRG2
WLRG2-LDS-N	WLRG2-LDS
WLMGCA2-LD-N	WLMGCA2-LD
WLMGCA2-LD-M1J-N	WLMGCA2-LD-M1J
WLMGCA2-LDK43-N	WLMGCA2-LDK43
WLMGCA2-LDK13-N	WLMGCA2-LDK13
WLMGCA2-LDK13A-N	WLMGCA2-LDK13A
WLMG2-LD-N	WLMG2-LD
WLMG2-LD-M1J-N	WLMG2-LD-M1J
WLMG2-LDK43-N	WLMG2-LDK43
WLMG2-LDK13-N	WLMG2-LDK13
WLMG2-LDK13A-N	WLMG2-LDK13A
WLMG2-LD-DGJ-N	WLMG2-LD-DGJ03
WLGL-TH-N	WLGL-TH
WLGL-TC-N	WLGL-TC
WLGL-P1-N	WLGL-P1
WLGL-N	WL01GL
	WLGL
WLGL-LE-N	WLGL-LE
WLGL-LD-N	WLGL-LD
WLGCA2-TH-N	WL01GCA2-TH
	WLGCA2-2TH
	WLGCA2-TH
WLGCA2-TC-N	WLGCA2-TC
WLGCA2-RP-N	WLGCA2-RP
WLGCA2-RP60-N 5M	WLGCA2-RP60
WLGCA2-RP60LD3-N 5M	WLGCA2-RP60LD3
WLGCA2-RP60LD2-N 5M	WLGCA2-RP60LD2
WLGCA2-N	WL01GCA2
	WLGCA2
WLGCA2-LES-N	WLGCA2-LES
WLGCA2-LE-N	WL01GCA2-LE
	WLGCA2-LE

WL-N	WL
WLGCA2-LDS-N	WLGCA2-LDS
WLGCA2-LDS-M1J-1-N	WLGCA2-LDS-M1J-1
WLGCA2-LDS-M1GJ-1-N	WLGCA2-LDS-M1GJ-1
WLGCA2-LD-N	WL01GCA2-LD
	WLGCA2-LD
WLGCA2-LD-M1J-N	WLGCA2-LD-M1J
WLGCA2-LD-M1GJ-N	WLGCA2-LD-M1GJ 0.3M
WLGCA2-LDK43-N	WL01GCA2-LDK43
	WLGCA2-LDK43
WLGCA2-LDK13-N	WLGCA2-LDK13
WLGCA2-LD-DGJ-N	WLGCA2-LD-DGJ03
WLGCA2-55-N	WLGCA2-55
WLGCA2-55LE-N	WLGCA2-55LE
WLGCA2-55LD-N	WL01GCA2-55LD
	WLGCA2-55LD
WLGCA2-55LD-M1J-N	WLGCA2-55LD-M1J 0.3M
WLGCA2-55LD-M1JB-N	WLGCA2-55LD-M1JB 0.3M
WLGCA2-55LD-M1GJ-N	WLGCA2-55LD-M1GJ 0.3M
WLGCA2-55LDK43-N	WL01GCA2-55LDK43
	WLGCA2-55LDK43
WLGCA2-55LDK13-N	WL01GCA2-55LDK13
	WLGCA2-55LDK13
	WLGCA2-55LDK13CE
WLGCA2-55LD-DGJ-N	WLGCA2-55LD-DGJ03
WLGCA2-139-N 5M	WLGCA2-139 5M
WLGCA2-139-N 3M	WLGCA2-139 3M
WLGCA2-139-N 2M	WLGCA2-139 2M
WLGCA2-139LD3-N 5M	WLGCA2-1395LD3 S-FLEX 5M
WLGCA2-139LD3-N 5M	WLGCA2-139LD3 5M
WLGCA2-139LD2-N 5M	WLGCA2-139LD2 5M
WLG2-TC-N	WLG2-TC
WLG2-RP-N	WLG2-RP
WLG2-RP60-N 5M	WLG2-RP60
WLG2-RP60-N 10M	WLG2-RP60 10M
WLG2-RP60LD3-N 5M	WLG2-RP60LD3
WLG2-RP60LD2-N 5M	WLG2-RP60LD2
WLG2-P1-N	WLG2-P1
WLG2-LES-N	WLG2-LES
WLG2-LE-N	WL01G2-LE
	WLG2-LE
WLG2-LEAS-N	WLG2-LEAS
WLG2-LDK43-N	WLG2-LDK43
WLG2-LDK13-N	WL01G2-LDK13
	WLG2-LDK13
WLG2-LD-DK1EJ-N	WLG2-LD-DK1EJ03
WLG2-LDAS-N	WLG2-LDAS
WLG2-55-N	WL01G2-55
	WLG2-55
WLG2-55LE-N	WLG2-55LE
WLG2-55LD-N	WL01G2-55LD
	WLG2-55LD
WLG2-55LD-M1TJ-N	WLG2-55LD-M1TJ
WLG2-55LD-M1TJB-N	WLG2-55LD-M1TJB

WL-N	WL
WLG2-55LD-M1JB-N	WLG2-55LD-M1JB
WLG2-55LD-M1GJ-N	WLG2-55LD-M1GJ 0.3M
WLG2-55LDK43-N	WL01G2-55LDK43
	WLG2-55LDK43
WLG2-55LDK13-N	WL01G2-55LDK13
	WLG2-55LDK13
	WLG2-55LDK13CE
WLG2-55LD-DTK1EJ-N	WLG2-55LD-DTK1EJ03
WLG2-55LD-DK1EJ-N	WLG2-55LD-DK1EJ03
WLG2-55LD-DGJ-N	WL01G2-55LD-DGJ03
	WLG2-55LD-DGJ03
WLG2-141-N 5M	WLG2-141 5M
WLG2-141-N 2M	WLG2-141 2M
WLG2-141LD3-N 5M	WL01G2-141LD3 5M
	WLG2-141LD3 5M
WLG2-141LD2-N 5M	WLG2-141LD2 5M
WLG2-140-N 5M	WLG2-140 5M
WLG2-139-N 5M	WLG2-139 5M
WLG2-139-N 3M	WLG2-139 3M
WLG2-139LD3-N 5M	WLG2-139LD3 5M
WLG12-TC-N	WLG12-TC
WLG12-P1-N	WLG12-P1
WLG12-LE-N	WLG12-LE
WLG12-LD-N	WLG12-LD
WL-2H4100-N (FOR WLGL-N)	None
WL-2H2100-N (FOR WLG12-N)	None
WL-2H1100W-N (FOR WLG2-141-N)	None
WL-2H1100S-N (FOR WLG2-S-N)	None
WL-2H1100-N (FOR WLG2-N)	None

Safety Precautions

Precautions for Safe Use

- Be sure to ground. Otherwise electric shock may result.
- Do not touch charged switch terminals while the switch has carry current, Otherwise electric shock may result.
- Do not disassemble the limit switch or touch inside of it under supplying power,
  Otherwise electric shock may result.
- Do not disassemble the limit switch or touch inside of it under supplying power, otherwise there is the possibility that electrical shock occurs.
- Do not touch the wire or rod type actuator in order to prevent injury.
- Connect a fuse which has 1.5 to 2 times higher breaking current than the switch rated current to the switch in series in order to prevent the switch from short-circuit damage.
- On the occasion when using the switch with GB ratings, use a 10A fuse that complies IEC60269, either type gG.
- The durability of switch is depends on the operating condition Be sure to check the condition with actual using condition before using, and use with the number of times of operating without a performance problem.
- Otherwise, there is the possibility of spoiling the normal operation. Do not drop the switch.
- Do not connect a Single Limit Switch to two power supplies that are different in polarity or type. Risk of interference.
- Be sure to keep the load current less than the rated value. Otherwise, there is the possibility that the switch may be damage and/or burnout.
- Do not use the Switch by itself in atmospheres containing flammable or explosive gases. Arcs and heating resulting from switching may cause fire or explosion.
- Be sure to prevent the foreign materials such like a scrapped cable intrusion in to the switch when wiring. Otherwise, there is the possibility of spoiling the normal operation.
- Never wire to the wrong terminals.
- Do not store or use the switch with following place.
  Where the temperature fluctuates greatly
  Where the humidity is very high and condensation may occur.
  Where the vibration is too much
  Where receiving direct sunshine.
  Where receiving salty wind.
- Do not disassemble and/or modify the switch at anytime. Otherwise, there is the possibility of spoiling the normal operation.
- Do not apply the force such like deformation and/or degeneration to the switch.

Precautions for Correct Use

Environment

- Take special care to use where there is fine powder, mud and/or foreign materials stacking. And check the condition with actual using condition before using. Then use without a performance problem.
- Do not keep the Switch in locations with corrosive gas, such as sulfuric gas (H_2S or SO_2), ammonium gas (NH_3), nitric gas (HNO_3), or chlorine gas (Cl_2), or high temperature and humidity.Otherwise, contact failure or corrosion damage may result.
- Seal material may deteriorate if a Switch is used outdoor or where subject to special cutting oils, solvents, or chemicals. Always appraise performance under actual application conditions and set suitable maintenance and replacement periods.
- Install Switches where they will not be directly subject to cutting chips, dust, or dirt. The Actuator and Switch must also be protected from the accumulation of cutting chips or sludge.

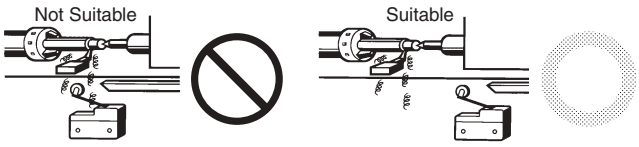

- Constantly subjecting a Switch to vibration or shock can result in wear, which can lead to contact interference with contacts, operation failure, reduced durability, and other problems. Excessive vibration or shock can lead to false contact operation or damage. Install Switches in locations not subject to shock and vibration and in orientations that will not produce resonance.
- The Switches have physical contacts. Using them in environments containing silicon gas will result in the formation of silicon oxide (SiO_2) due to arc energy. If silicon oxide accumulates on the contacts, contact interference can occur. If silicon oil, silicon filling agents, silicon cables, or other silicon products are present near the Switch, suppress arcing with contact protective circuits (surge suppressor) or remove the source of silicon gas.

Installing the Switch

- To install the Switch, make a mounting panel, as shown in the following diagram, and tighten screws using the appropriate tightening torque.

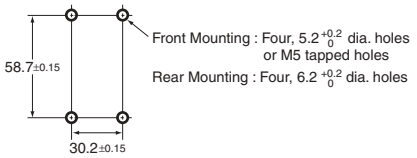

Using Switches for Micro Loads

Contact faults may occur if a Switch for a general-load is used to switch a micro load circuit. Use switches in the ranges shown in the diagram below. However, even when using microload models within the operating range shown here, if inrush current occurs when the contact is opened or closed, it may increase contact wear and so decrease durability. Therefore, insert a contact protection circuit where necessary.

For the WL-N, the P level is at the min. operating load of 5 VDC and 1 mA resistive load.

Note: The P level indicates the standard malfunction level at a reliability level of 60% (λ_{60}).
(JISC5003) $\lambda_{60} = 0.1 \times 10^{-6}$/operations indicates that the estimated malfunction rate is less than 1/10,000,000 operations with a reliability level of 60%.

For the WL01G□, the N level is a reference value at the min. operating load of 5 VDC and 1 mA resistive load. An estimated malfunction rate of 1/2,000,000 operations at a reliability level of 60% is indicated as a reference value.

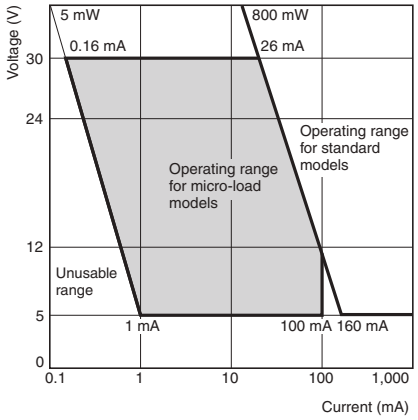

Tightening Torque

- If screws are too loose they can lead to an early malfunction of the Switch, so ensure that all screws are tightened using the appropriate tightening torque.
- In particular, when changing the direction of the Head, make sure that all screws are tightened again to the appropriate tightening torque. Do not allow foreign objects to fall into the Switch.

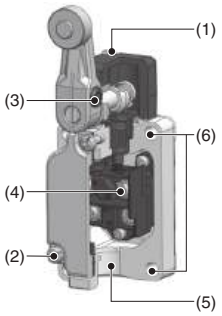

No.	Type	Torque	Screw type
(1)	Head mounting screw	0.78 to 0.88 N•m	M3.5 screw
(2)	Cover mounting screw	1.18 to 1.37 N•m	M4 screw
(3)	Allen-head bolt (for securing the roller lever)	4.90 to 5.88 N•m	M5 hexagon socket head cap screw
(3)	Allen-head bolt (for securing the adjustable rod lever)	0.88 to 1.08 N•m	M8 hexagon socket set screw
(4)	Terminal screw	0.59 to 0.78 N•m	M3.5 screw
(5)	Connector	1.77 to 2.16 N•m	G1/2orPg13.5orM20or 1/2-14NPT
(6)	Unit mounting screw	4.90 to 5.88 N•m	M5 screw
	Back mounting screws	4.90 to 5.88 N•m	M6 screw

Wring

In the case of mounting screw

Basic Switches

- Use M3.5-nylon insulation covered crimp terminals (round type) for wiring.
  Ex.) V1.25-M3.5(RAP1.25-3.5) (J.S.T. Mfg. Co.,Ltd.)
- Appropriate wire size is AWG16 (1.25 mm^2).
- Do not supply electric power when wiring. Otherwise electric shock may result.
- Do not pull out the wires with excessive force. It may cause of coming off the wire.
- Use crimp terminals for wiring.
- In the case of indicator unit, to avoid interference between lump unit and crimp terminals, wire according to right wiring figure.
  Attach the indicator unit spring to terminal screw certainly, otherwise it's possible to be destroyed or shorted.
- The ground terminal is only installed on models with ground terminals.

High-sensitivity and High-precision Switches

- Use 1.25-mm^2 lead wires and M4-insulation covered crimp terminals for wiring.

Crimp Terminal External Dimensions

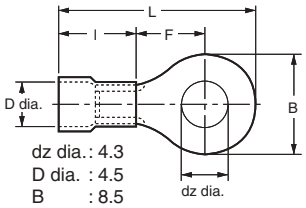

dz dia. : 4.3
D dia. : 4.5
B : 8.5
L : 21.0
F : 7.8
I : 9.0 (mm)

Wiring Method Switch Box Section

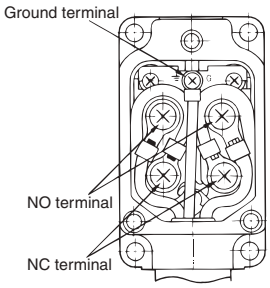

- The ground terminal is only installed on models with ground terminals.

In the case of prewired connector and direct connector

- Holding the connector certainly when pulling connector.
- Don't pull the cable holding it.

How to handle

Changing direction of the head

- By removing two head screws or four head screws, mounting in any of four orientations is possible. Be sure to change the plunger for internal operations at the same time.

Built-in Switch

- Do not remove or replace the built-in switch. Risk of malfunctioning.

Overtravel Markers

- All Switches with Roller Lever Actuators except for Switches with Fork Lock Levers and Low-temperature Switches have a set position marker plate.
- To allow the roller lever type actuator to travel properly, set the roller lever according to the dog or cam stroke so that the arrowhead of the lever is positioned within the overtravel markers (pages 36, 37).

Connectors

- Tighten the connector with the appropriate torque to prevent deformation.
- Use the OMRON type SC connector series, which is prepared separately, suitable for outer diameter of cable and inner diameter of seal rubber.
- Make sure to wrap the connector with the seal tape, except the connector which has O-ring, to keep the sealability.
- To conform to CSA, use a CSA certified water tight treated conduit hub.
- Even when the connector is assembled and set correctly, the end of the cable and the inside of the Switch may come in contact. This can lead to malfunction, leakage current, or fire, so be sure to protect the end of the cable from splashes of oil or water and corrosive gases.

Microload Applications

- The WL-N Basic Models contacts can be used both for standard loads and microloads, but once a contact has been used to open and close a load it can no longer be used for lower loads. Doing so will damage the contact surface and reduce contact reliability.
- If an inrush current or other sudden load occurs during a switch operation, the switch will begin to degrade severely which can result in reduced durability. Use a contact protection circuit if required.

Indicator

Indicator-equipped switch has contacts and indicator in parallel. When contacts are open, leakage current flows through the indicator circuit and may cause load's malfunction. Leakage current may cause load malfunction (i.e., the load may remain ON). Make sure that the load operating current is higher than the leakage current. For countermeasures, refer to technical support on your OMRON website.

Terminal Plate

Basic Switches

By using the Terminal Plate (sold separately), as shown in the following diagram, the Switch can be used as a single-polarity double-break switch.

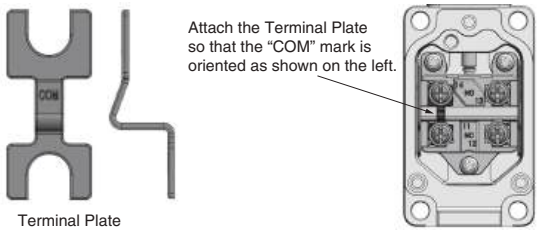

Terminal Plate

Terminal Plate Mounting Diagram (with Two Terminal Screws Removed)

Model	WL-N TERMINAL PLATE

High-sensitivity/High-precision Switches

By using a short circuit plate, as shown in the following diagram, the Switch can be fabricated into a single-polarity double-break switch. When ordering, specify WL Terminal Plate (product code: WL-9662F).

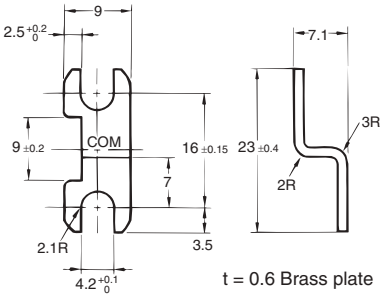

t = 0.6 Brass plate

Using a WL□-2N Switch Mounted from the Side

If you replace a previous Switch with a WL□-2N-N Switch, a Mounting Plate (sold separately) is available to maintain mounting compatibility. If you use the Mounting Plate, the Switch mounting holes and actuator position will be compatible. (The position of the dog remains unchanged.)

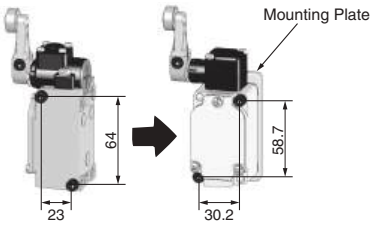

WL□-2N Mounting Plate

Replacing a Switch with the WL□-2N-N

Set contents	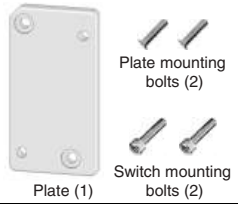 Plate (1) Plate mounting bolts (2) Switch mounting bolts (2)
Model	WLN-P001

Operation

- Carefully determine the position and shape of the dog or cam so that the actuator will not abruptly snap back, thus causing shock. In order to operate the Limit Switch at a comparatively high speed, use a dog or cam that keeps the Limit Switch turned ON for a sufficient time so that the relay or valve will be sufficiently energized.
- The method of operation, the shape of the cam or dog, the operating frequency, and the travel after operation have a large influence on the durability and operating accuracy of the Limit Switch. The cam or dog must be smooth in shape.

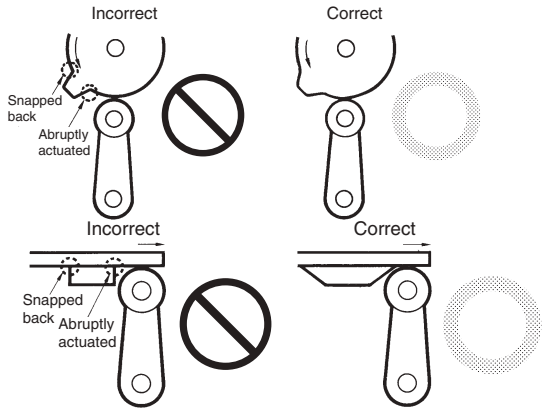

- Appropriate force must be imposed on the actuator by the cam or dog in both rotary operation and linear operation.
  If the dog touches the lever as shown below, the operating position will not be stable.

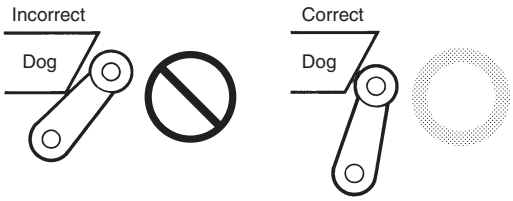

- Unbalanced force must not be imposed on the actuator. Otherwise, wear and tear on the actuator may result.

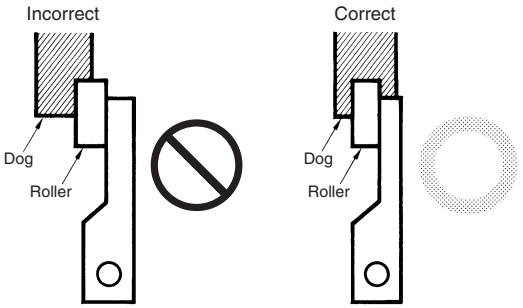

- With a roller actuator, the dog must touch the actuator at a right angle. The actuator or shaft may deform or break if the dog touches the actuator (roller) at an oblique angle.

- Make sure that the actuator does not exceed the OT (overtravel) range, otherwise the Limit Switch may malfunction. When mounting the Limit Switch, be sure to adjust the Limit Switch carefully while considering the whole movement of the actuator.

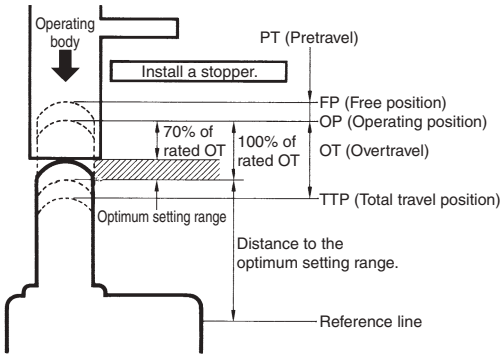

- The Limit Switch may soon malfunction if the OT is excessive. Therefore, adjustments and careful consideration of the position of the Limit Switch and the expected OT of the operating body are necessary when mounting the Limit Switch.

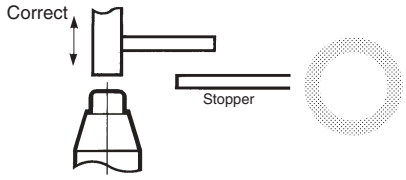

- When using a pin-plunger actuator, make sure that the stroke of the actuator and the movement of the dog are located along a single straight line.

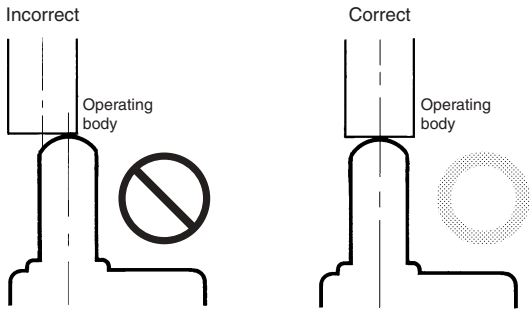

Others

- For long term (over a year) storage, check according to Operating characteristics, Contact resistance and Dielectric strength at least. And check with using condition.
- The durability of the Switch is greatly affected by operating conditions.
  Evaluate the Switch under actual working conditions before permanent installation and use the Switch within a number of switching operations that will not adversely affect the Switch's performance.

Using the Switches

Item	Applicable models and Actuators	Details
Changing the Installation Position of the Actuator By loosening the Allen-head bolt on the actuator lever, the position of the actuator can be set anywhere within the 360°. With Operation Indicator-equipped Switches, the actuator lever comes in contact with the top of the indicator cover, so use caution when rotating and setting the lever. When the lever only moves forwards and backwards, it will not contact the lamp cover. (This does not apply to Long-life Models.)	Roller lever: (WLCA2-N, WLCA2-2-N, WLCA2-2N-N, WLG2, WLCA2-7-N, WLCA2-8-N, WLGCA2, WLMCA2-N, WLMG2, WLMGCA2) Adjustable Roller Lever: (WLCA12-N, WLCA12-2-N, WLCA12-2N-N, WLG12) Adjustable Rod Lever: (WLCL-N, WLCL-2-N, WLCL-2N-N, WLGL, WLCAL4-N, WLCAL5-N)	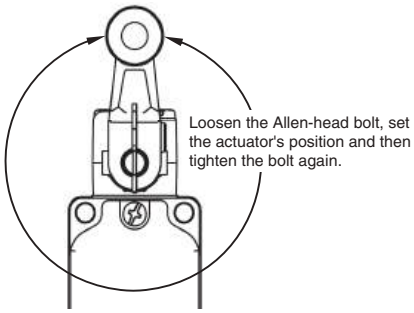
Changing the Orientation of the Head By removing the head screws (two or four screws), mounting in any of four orientations is possible. Be sure to change the plunger for internal operations at the same time. The roller plunger can be set in either of two positions at 90°.	Roller lever: (WLCA2-N, WLCA2-2-N, WLCA2-2N-N, WLG2, WLCA2-7-N, WLCA2-8-N, WLGCA2, WLMCA2-N, WLMG2, WLMGCA2) Adjustable Roller Lever: (WLCA12-N, WLCA12-2-N, WLCA12-2N-N, WLG12) Adjustable Rod Lever: (WLCL-N, WLCL-2-N, WLCL-2N-N, WLGL, WLCAL4-N, WLCAL5-N) Horizontal plunger: (WLSD□-N) Top-roller plunger: (WLD2-N) Sealed top-roller plunger: (WLD28-N) Fork lock lever: (WLCA32-4□-N) **Note:** Excludes the -RP60-series and -141-series.	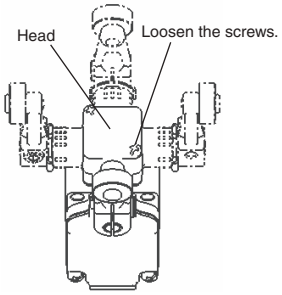
Changing the Operating Direction By removing the Head on models which can operate on one-side only, and then changing the direction of the operational plunger, one of three operating directions can be selected. The tightening torque for the screws on the Head is 0.78 to 0.88 N·m.	Roller lever: (WLCA2-N, WLCA2-2-N, WLCA2-2N-N, WLCA2-7-N, WLCA2-8-N, WLMCA2-N) Adjustable Roller Lever: (WLCA12-N, WLCA12-2-N, WLCA12-2N-N) Adjustable Rod Lever: (WLCL-N, WLCL-2-N, WLCL-2N-N, WLCAL4-N, WLCAL5-N)	**One-side Operation** The output of the Switch will be changed, regardless of which direction the lever is pushed. The output of the Switch will only be changed when the lever is pushed in one direction. 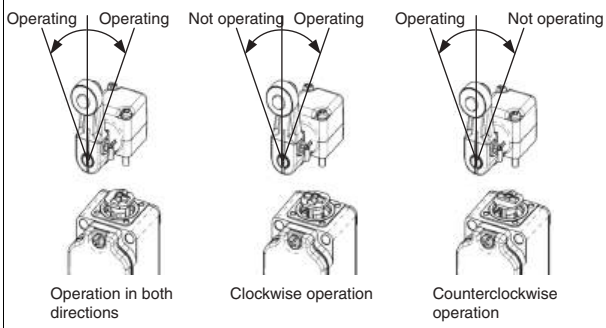
	Roller lever: (WLGCA2, WLMGCA2)	One-side Operation for High-sensitivity and High-precision Switches The output of the Switch will be changed, regardless of which direction the lever is pushed. The output of the Switch will only be changed when the lever is pushed in one direction. 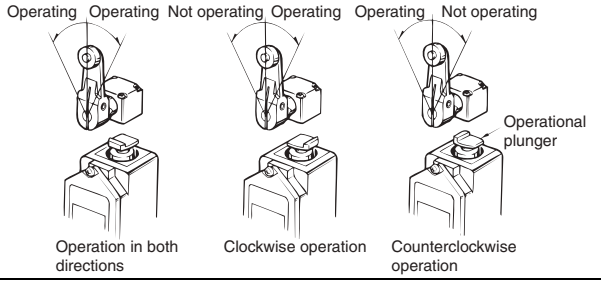

Item	Applicable models and Actuators	Details
Installing the Roller on the Inside By installing the roller lever in the opposite direction, the roller can be installed on the inside. (Set so that operation can be completed within a 180° level range.)	Roller lever: (WLCA2-N, WLCA2-2-N, WLCA2-2N-N, WLG2, WLCA2-7-N, WLCA2-8-N, WLGCA2, WLMCA2-N, WLMG2, WLMGCA2) Fork Lock Lever: (WLCA32-4□-N)	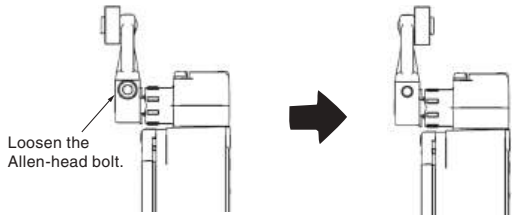
Adjusting the Length of the Rod or Lever The length of the rod or lever can be adjusted by loosening the Allen-head bolt.	Adjustable Roller Lever: (WLCA12-N, WLCA12-2-N, WLCA12-2N-N, WLG12) Adjustable Rod Lever: (WLCL-N, WLCL-2-N, WLCL-2N-N, WLGL, WLCAL4-N)	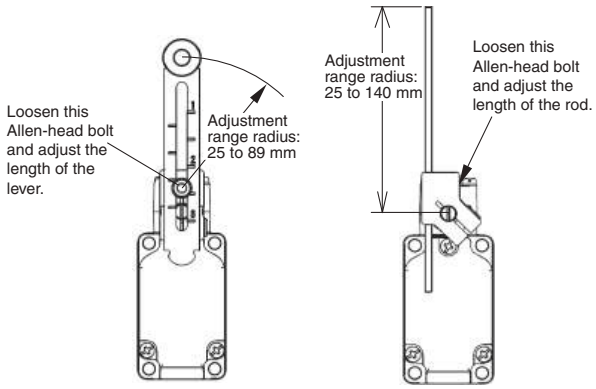 **Adjustable Roller Levers:** **Adjustable Rod Levers:**
Selecting the Roller Position There are four types of Switches with Fork Lock Levers for use depending on the roller position.	Fork Lock Lever: (WLCA32-4□-N)	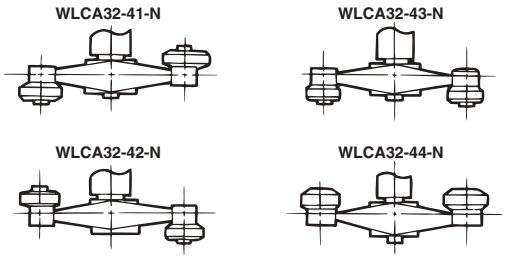 An explanation of the operation of fork lock levers is provided after this table.

Operation of Fork Lock Levers

A Switch with a Fork Lock Lever is constructed so that the dog pushes the lever to invert the output and this inverted state is maintained even after the dog moves on.
If the dog then pushes the lever from the opposite direction, the lever will return to its original position.

Example

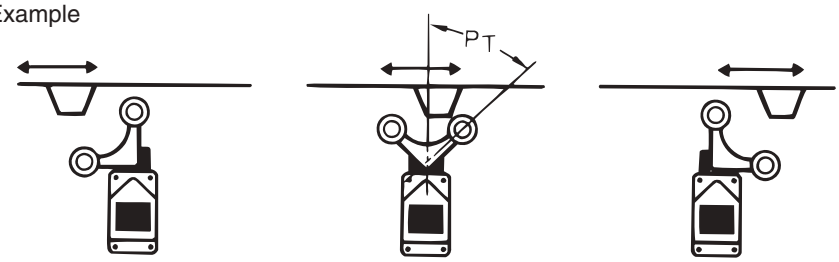

NC terminal: ON NO terminal: ON NO terminal: ON

Limit Switch Connectors

Connectors (SC Series)

Cabtire cables and flexible tubes with various diameters are used to connect machine tools and controllers with Limit Switches. To ensure the watertightness of the edges of the conduits, use an SC Connector that is suitable for the external diameter of cable and model of Limit Switch.

Ordering Information

Connector for Cabtire Cable

Conduit	Applicable cable	Inner diameter (D) of seal rubber	External diameter of cable		Model	Applicable model
			Min.	Max.		
JIS B 0202 G½	Cabtire cable (general-purpose)	7 mm	5.5 mm	7.5 mm	**SC-1M**	WL-N, WL, D4A-□N, D4B-□N, ZE, ZV, ZV2, XE, XV, XV2
		9 mm	7.5 mm	9.5 mm	**SC-2M**	
		12.5 mm	11 mm	13 mm	**SC-3M**	
		14 mm	12 mm	14 mm	**SC-4M**	
		11 mm	9 mm	11 mm	**SC-5M**	
	Cabtire cable (anti-corrosive)	7 mm	5.5 mm	7.5 mm	**SC-21**	
		9 mm	7.5 mm	9.5 mm	**SC-22**	
		12.5 mm	11 mm	13 mm	**SC-23**	
		14 mm	12 mm	14 mm	**SC-24**	
		11 mm	9 mm	11 mm	**SC-25**	
½-14NPT	Cabtire cable	7 mm	5.5 mm	7.5 mm	**SC-1PT**	D4A-□N
		9 mm	7.5 mm	9.5 mm	**SC-2PT**	
		12.5 mm	11 mm	13 mm	**SC-3PT**	
		14 mm	12 mm	14 mm	**SC-4PT**	
		11 mm	9 mm	11 mm	**SC-5PT**	

Note: Please use sealing tape with SC Connectors. SC-1M to SC-5M, however, are provided with an O-ring (NBR) and therefore sealing tape is not necessary to ensure a proper seal.

Simple Connectors (Not Suitable for Locations Subject to Oil or Water)

Conduit	Applicable cable	Inner diameter (D) of seal rubber	External diameter of cable		Model	Applicable model
			Min.	Max.		
JIS B 0202 G½	Cabtire cable	10.6 mm	8.5 mm	10.5 mm	**SC-P2**	WL-N, WL, D4A-□N, D4B-□N, ZE, ZV, ZV2, XE, XV, XV2
Pg13.5		9.6 mm	7.5 mm	9.5 mm	**SC-P3**	WL□-G-N
JIS B 0202 G½		9 mm	7.5 mm	9 mm	**SC-6**	WL-N, WL, D4A-□N, D4N *, D4N-□R *, D4B-□N, ZE, ZV, ZV2, XE, XV, XV2

Note: Simple connector are made of resin. If more sealing capability is required, use one of SC-1M to SC-5M, which have metal casings. Models marked with an asterisk (*) however, can only be used with resin connectors.

Dimensions and Structure

(Unit: mm)

Connectors for Cabtire Cable

As for models without an O-ring, please use sealing tape with SC Connectors.

Metal Models without O-ring
G½
SC-21 to 25

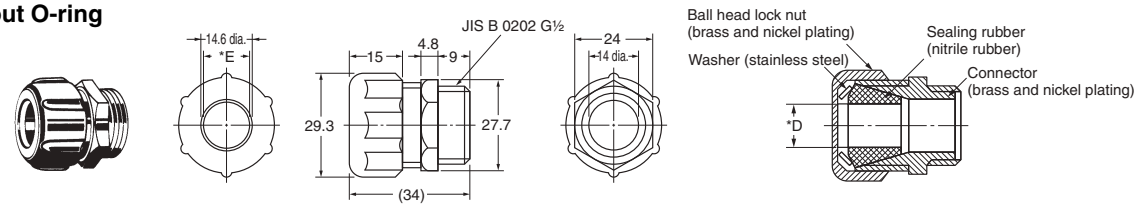

Metal Models with O-ring
G½
SC-1M to 5M

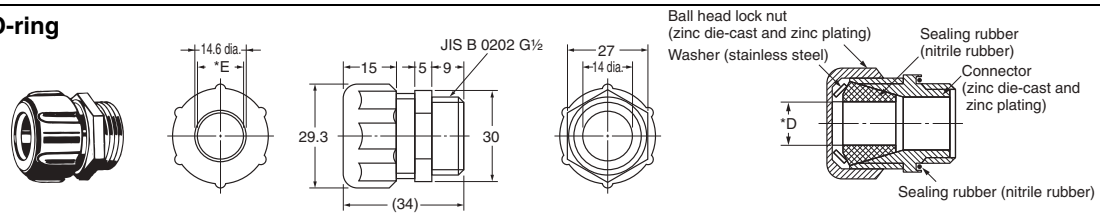

Metal Models without O-ring
½-14NPT
(U.S.-standard screws)
SC-1PT to 5PT

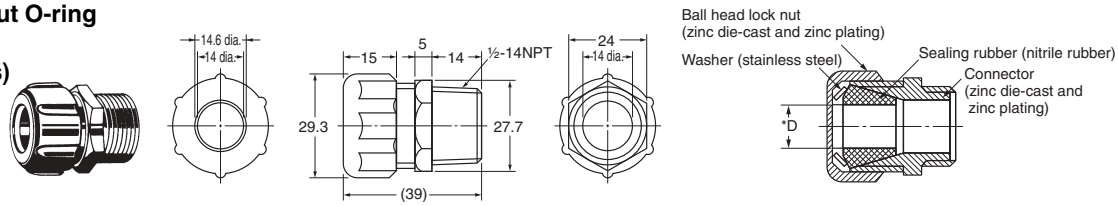

Note: Dimensions not shown in the above diagrams have a variation of ±0.4 mm.

Simple Connectors (Not Suitable for Locations Subject to Oil or Water)

Resin Models
G½
SC-P2

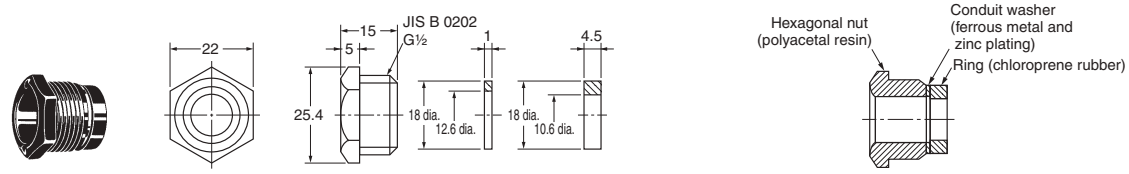

Resin Models
Pg13.5
SC-P3

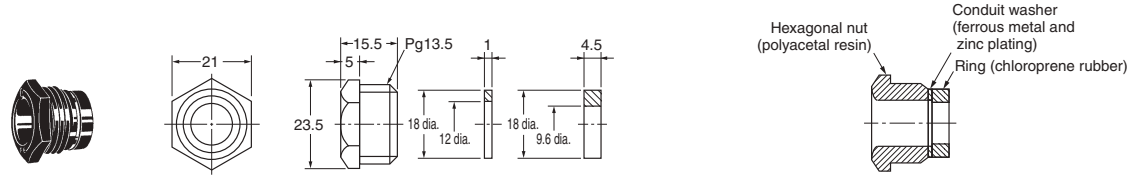

Resin Models
G½
SC-6

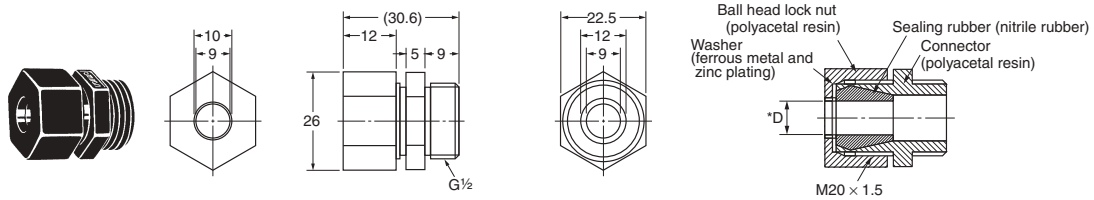

Note: Dimensions not shown in the above diagrams have a variation of ±0.4 mm.

* Diameter of Part Marked with Asterisk

Model	Inner diameter (D) of sealed rubber	Internal diameter (E) of washer	Applicable cable
SC-21, -1M, -1PT	7 mm	10.4 mm	5.5 to 7.5-mm dia.
SC-22, -2M, -2PT	9 mm	13.2 mm	7.5 to 9.5-mm dia.
SC-23, -3M, -3PT	12.5 mm	14.6 mm	11 to 13-mm dia.
SC-24, -4M, 4PT	14 mm	14.6 mm	12 to 14-mm dia.
SC-25, -5M, -5PT	11 mm	13.2 mm	9 to 11-mm dia.
SC-6	9 mm	10 mm	7.5 to 9-mm dia.

MEMO

Terms and Conditions Agreement

Read and understand this catalog.

Please read and understand this catalog before purchasing the products. Please consult your OMRON representative if you have any questions or comments.

Warranties.

(a) Exclusive Warranty. Omron's exclusive warranty is that the Products will be free from defects in materials and workmanship for a period of twelve months from the date of sale by Omron (or such other period expressed in writing by Omron). Omron disclaims all other warranties, express or implied.

(b) Limitations. OMRON MAKES NO WARRANTY OR REPRESENTATION, EXPRESS OR IMPLIED, ABOUT NON-INFRINGEMENT, MERCHANTABILITY OR FITNESS FOR A PARTICULAR PURPOSE OF THE PRODUCTS. BUYER ACKNOWLEDGES THAT IT ALONE HAS DETERMINED THAT THE PRODUCTS WILL SUITABLY MEET THE REQUIREMENTS OF THEIR INTENDED USE.

Omron further disclaims all warranties and responsibility of any type for claims or expenses based on infringement by the Products or otherwise of any intellectual property right. (c) Buyer Remedy. Omron's sole obligation hereunder shall be, at Omron's election, to (i) replace (in the form originally shipped with Buyer responsible for labor charges for removal or replacement thereof) the non-complying Product, (ii) repair the non-complying Product, or (iii) repay or credit Buyer an amount equal to the purchase price of the non-complying Product; provided that in no event shall Omron be responsible for warranty, repair, indemnity or any other claims or expenses regarding the Products unless Omron's analysis confirms that the Products were properly handled, stored, installed and maintained and not subject to contamination, abuse, misuse or inappropriate modification. Return of any Products by Buyer must be approved in writing by Omron before shipment. Omron Companies shall not be liable for the suitability or unsuitability or the results from the use of Products in combination with any electrical or electronic components, circuits, system assemblies or any other materials or substances or environments. Any advice, recommendations or information given orally or in writing, are not to be construed as an amendment or addition to the above warranty.

See http://www.omron.com/global/ or contact your Omron representative for published information.

Limitation on Liability; Etc.

OMRON COMPANIES SHALL NOT BE LIABLE FOR SPECIAL, INDIRECT, INCIDENTAL, OR CONSEQUENTIAL DAMAGES, LOSS OF PROFITS OR PRODUCTION OR COMMERCIAL LOSS IN ANY WAY CONNECTED WITH THE PRODUCTS, WHETHER SUCH CLAIM IS BASED IN CONTRACT, WARRANTY, NEGLIGENCE OR STRICT LIABILITY.

Further, in no event shall liability of Omron Companies exceed the individual price of the Product on which liability is asserted.

Suitability of Use.

Omron Companies shall not be responsible for conformity with any standards, codes or regulations which apply to the combination of the Product in the Buyer's application or use of the Product. At Buyer's request, Omron will provide applicable third party certification documents identifying ratings and limitations of use which apply to the Product. This information by itself is not sufficient for a complete determination of the suitability of the Product in combination with the end product, machine, system, or other application or use. Buyer shall be solely responsible for determining appropriateness of the particular Product with respect to Buyer's application, product or system. Buyer shall take application responsibility in all cases.

NEVER USE THE PRODUCT FOR AN APPLICATION INVOLVING SERIOUS RISK TO LIFE OR PROPERTY OR IN LARGE QUANTITIES WITHOUT ENSURING THAT THE SYSTEM AS A WHOLE HAS BEEN DESIGNED TO ADDRESS THE RISKS, AND THAT THE OMRON PRODUCT(S) IS PROPERLY RATED AND INSTALLED FOR THE INTENDED USE WITHIN THE OVERALL EQUIPMENT OR SYSTEM.

Programmable Products.

Omron Companies shall not be responsible for the user's programming of a programmable Product, or any consequence thereof.

Performance Data.

Data presented in Omron Company websites, catalogs and other materials is provided as a guide for the user in determining suitability and does not constitute a warranty. It may represent the result of Omron's test conditions, and the user must correlate it to actual application requirements. Actual performance is subject to the Omron's Warranty and Limitations of Liability.

Change in Specifications.

Product specifications and accessories may be changed at any time based on improvements and other reasons. It is our practice to change part numbers when published ratings or features are changed, or when significant construction changes are made. However, some specifications of the Product may be changed without any notice. When in doubt, special part numbers may be assigned to fix or establish key specifications for your application. Please consult with your Omron's representative at any time to confirm actual specifications of purchased Product.

Errors and Omissions.

Information presented by Omron Companies has been checked and is believed to be accurate; however, no responsibility is assumed for clerical, typographical or proofreading errors or omissions.

OMRON Corporation **Industrial Automation Company**
Kyoto, JAPAN
Contact: www.ia.omron.com

Regional Headquarters
OMRON EUROPE B.V.
Wegalaan 67-69, 2132 JD Hoofddorp
The Netherlands
Tel: (31)2356-81-300/Fax: (31)2356-81-388

OMRON ELECTRONICS LLC
2895 Greenspoint Parkway, Suite 200
Hoffman Estates, IL 60169 U.S.A.
Tel: (1) 847-843-7900/Fax: (1) 847-843-7787

OMRON ASIA PACIFIC PTE. LTD.
No. 438A Alexandra Road # 05-05/08 (Lobby 2),
Alexandra Technopark,
Singapore 119967
Tel: (65) 6835-3011/Fax: (65) 6835-2711

OMRON (CHINA) CO., LTD.
Room 2211, Bank of China Tower,
200 Yin Cheng Zhong Road,
PuDong New Area, Shanghai, 200120, China
Tel: (86) 21-5037-2222/Fax: (86) 21-5037-2200

Authorized Distributor:

© OMRON Corporation 2017 All Rights Reserved.
In the interest of product improvement,
specifications are subject to change without notice.

CSM_1_1_0317
Cat. No. C151-E1-01 0317 (0317)