LFGH8092

Hinged Louvered Fan Guard

LFGH8092 for 80mm and 92mm fans. Also available in Black.



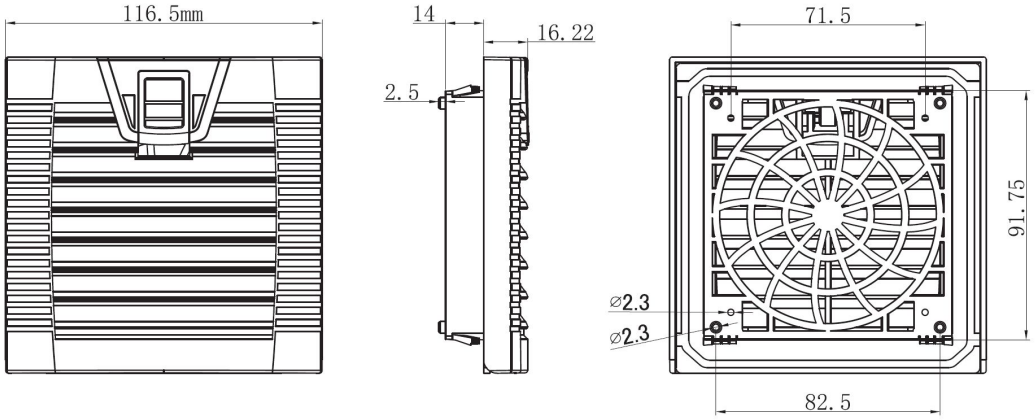

Part Number	LFGH8092	LFGH8092B
Color	Gray	Black *Minimum Order QTY Required
Frame Description	ABS Resin - Flame Resistant UL94 V-0, with UV Protection additive. Vents with screens at 45-degree angle. Perimeter Foam sealing edge - Protection grade IP44-IP54 max.	
Filter Mesh Material	Nylon Fiber - Synthetic Resin, filters to 8 microns.	
Hardware	1 Bag - 4 Pieces Each, M4x14, with Nut	

Installation Method

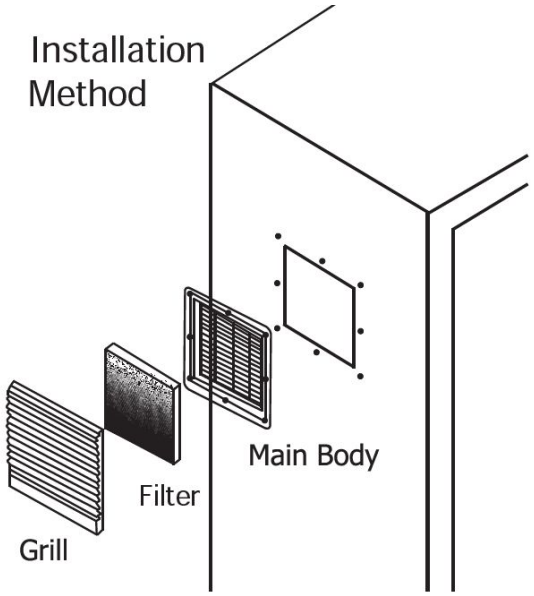

Filter Media 5-Packs

Part Number	Description
LFG8092M/PK	Bulk Filter Pack For LFGH8092

Assembled as Filter Kit



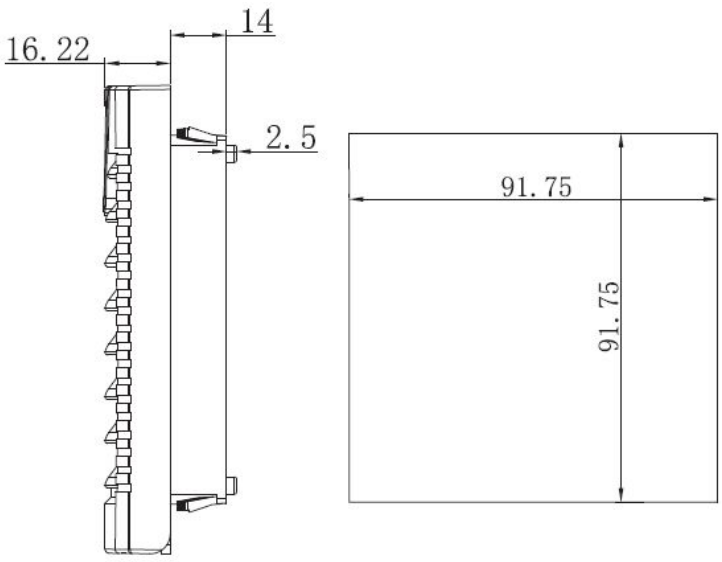

Knight Electronics, Inc.
10557 Metric Drive
Dallas, TX 75243
214-340-0265

Revised 4/10/2026

CE UKCA RoHS

Orion Fans

Information and data is subject to change without prior notification